DIST	COUNTY	ROUTE	POST MILES TOTAL PROJECT	SHEET No.	TOTAL SHEETS

REGISTERED CIVIL ENGINEER DATE

PLANS APPROVAL DATE

REGISTERED PROFESSIONAL ENGINEER No. Exp. CIVIL STATE OF CALIFORNIA

The State of California or its officers or agents shall not be responsible for the accuracy or completeness of scanned copies of this plan sheet.

The Registered Civil Engineer for the project is responsible for the selection and proper application of the component design and any modifications shown.

CULVERTS WITH FOOTINGS ON SOIL

SPAN, S		12′												14′												16′											
WALL HEIGHT, H		6′		8′		10′		12′		14′		15′		6′		8′		10′		12′		14′		15′		6′		8′		10′		12′		14′		15′	
Max Earth Cover		10′	20′	10′	20′	10′	20′	10′	20′	10′	20′	10′	20′	10′	20′	10′	20′	10′	20′	10′	20′	10′	20′	10′	20′	10′	20′	10′	20′	10′	20′	10′	20′	10′	20′	10′	20′
Depth - X		1′-9"	2′-0"	1′-9"	2′-0"	1′-9"	2′-0"	1′-9"	2′-0"	1′-9"	2′-0"	1′-9"	2′-0"	1′-9′	2′-6"	2′-0"	2′-6"	2′-0"	2′-6"	2′-0"	2′-6"	2′-0"	2′-6"	2′-0"	2′-6"	2′-0"	2′-6"	2′-0"	2′-6"	2′-0"	2′-6"	2′-0"	2′-6"	2′-0"	2′-6"	2′-0"	2′-6"
Width - Y		5′-0"	6′-0"	5′-0"	6′-0"	5′-0"	6′-0"	5′-0"	6′-0"	5′-0"	6′-0"	5′-0"	6′-0"	5′-0"	6′-0"	5′-0"	6′-0"	5′-0"	6′-6"	5′-0"	6′-6"	5′-0"	6′-6"	5′-0"	7′-0"	5′-6"	7′-0"	5′-6"	7′-0"	5′-6"	7′-0"	5′-6"	7′-0"	5′-6"	7′-0"	5′-6"	7′-0"
"f"	Bar size	#6	#6	#6	#6	#6	#6	#6	#6	#6	#6	#6	#6	#6	#6	#6	#6	#6	#6	#6	#6	#6	#6	#6	#6	#6	#6	#6	#6	#6	#6	#6	#6	#6	#6	#6	#6
	Bar Spacing	12"	12"	12"	12"	12"	12"	12"	12"	12"	12"	12"	12"	12"	12"	12"	12"	12"	12"	12"	12"	12"	12"	12"	12"	12"	12"	12"	12"	12"	12"	12"	12"	12"	12"	12"	12"
* Soil Pressure, qu (ksf)		5.17	7.93	5.39	8.17	5.84	8.53	6.35	9.03	7.05	9.75	7.43	10.11	5.76	10.37	6.57	10.75	7.04	9.79	7.61	10.32	8.38	11.02	8.76	10.30	6.13	9.25	6.41	9.41	6.73	9.73	7.30	10.29	7.87	10.95	8.32	11.30
Effective Footing Width, B′ (ft)		3.47	4.20	3.45	4.18	3.43	4.17	3.42	4.17	3.41	4.17	3.41	4.17	3.48	3.71	3.20	3.69	3.19	4.17	3.17	4.16	3.16	4.16	3.16	4.66	3.75	4.74	3.72	4.72	3.71	4.71	3.69	4.70	3.68	4.70	3.68	4.69

SPAN, S		18′												20′											
WALL HEIGHT, H		6′		8′		10′		12′		14′		15′		6′		8′		10′		12′		14′		15′	
Max Earth Cover		10′	20′	10′	20′	10′	20′	10′	20′	10′	20′	10′	20′	10′	20′	10′	20′	10′	20′	10′	20′	10′	20′	10′	20′
Depth - X		2′-0"	2′-6"	2′-0"	2′-6"	2′-0"	2′-6"	2′-0"	2′-6"	2′-0"	2′-6"	2′-0"	2′-6"	2′-6"	3′-0"	2′-6"	3′-0"	2′-6"	3′-0"	2′-6"	3′-0"	2′-6"	3′-0"	2′-6"	3′-0"
Width - Y		5′-6"	7′-6"	5′-6"	7′-6"	5′-6"	7′-6"	5′-6"	8′-0"	5′-6"	8′-0"	5′-6"	8′-0"	6′-0"	8′-0"	6′-0"	8′-0"	6′-0"	8′-0"	6′-0"	8′-6"	6′-0"	8′-6"	6′-0"	8′-6"
"f"	Bar size	#6	#7	#6	#7	#5	#7	#5	#7	#5	#7	#5	#7	#6	#7	#6	#7	#6	#7	#6	#7	#6	#7	#6	#7
	Bar Spacing	12"	12"	12"	12"	12"	12"	12"	12"	12"	12"	12"	12"	12"	12"	12"	12"	12"	12"	12"	12"	12"	12"	12"	12"
* Soil Pressure, qu (ksf)		6.77	9.34	6.96	9.49	7.40	9.84	7.88	9.30	8.59	9.98	8.97	10.20	7.58	10.46	7.79	10.76	8.13	11.01	8.76	10.48	9.45	10.99	9.88	11.29
Effective Footing Width, B′ (ft)		3.76	5.27	3.74	5.25	3.72	5.24	3.71	5.73	3.70	5.73	3.70	5.72	3.77	5.28	3.74	5.27	3.72	5.25	3.70	5.73	3.69	5.73	3.69	5.72

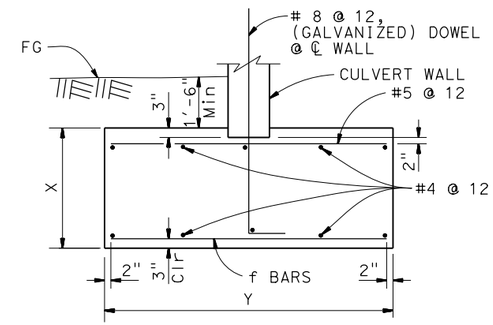

FOOTING ON SOIL

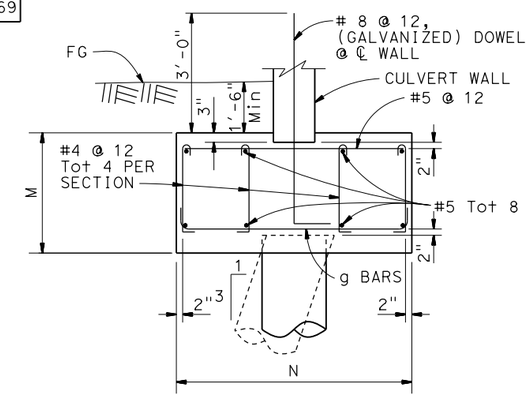

SINGLE PILE CAP SECTION X-X

NO SCALE

CULVERTS WITH PILE FOUNDATION OR WITH FOOTINGS ON ROCK

SPAN, S		12′												14′												16′											
WALL HEIGHT, H		6′		8′		10′		12′		14′		15′		6′		8′		10′		12′		14′		15′		6′		8′		10′		12′		14′		15′	
Max Earth Cover		10′	20′	10′	20′	10′	20′	10′	20′	10′	20′	10′	20′	10′	20′	10′	20′	10′	20′	10′	20′	10′	20′	10′	20′	10′	20′	10′	20′	10′	20′	10′	20′	10′	20′	10′	20′
Number of Rows		1	2	1	2	2	2	2	2	2	2	2	2	1	2	1	2	2	2	2	2	2	2	2	2	1	2	1	2	2	2	2	2	2	2	2	2
Pile Spacing		12′-0"	12′-0"	7′-3"	8′-9"	9′-9"	6′-3"	7′-6"	4′-9"	5′-9"	3′-9"	5′-3"	3′-6"	12′-0"	12′-0"	8′-0"	9′-9"	10′-3"	6′-6"	7′-6"	5′-0"	5′-9"	4′-0"	5′-3"	3′-6"	12′-0"	12′-0"	8′-0"	9′-9"	10′-6"	7′-0"	7′-9"	5′-3"	6′-0"	4′-0"	5′-3"	3′-6"
Cap Depth - M		2′-6"	3′-0"	2′-6"	3′-0"	3′-0"	3′-0"	3′-0"	3′-0"	3′-0"	3′-0"	3′-0"	3′-0"	2′-6"	3′-0"	2′-6"	3′-0"	3′-0"	3′-0"	3′-0"	3′-0"	3′-0"	3′-0"	3′-0"	3′-0"	2′-6"	3′-0"	2′-6"	3′-0"	3′-0"	3′-0"	3′-0"	3′-0"	3′-0"	3′-0"	3′-0"	3′-0"
Cap Width - N		3′-0"	7′-6"	3′-0"	7′-6"	7′-6"	6′-0"	7′-6"	7′-6"	7′-6"	7′-6"	7′-6"	7′-6"	3′-0"	7′-6"	3′-0"	7′-6"	7′-6"	7′-6"	7′-6"	7′-6"	7′-6"	7′-6"	7′-6"	7′-6"	3′-6"	7′-6"	3′-6"	7′-6"	7′-6"	7′-6"	7′-6"	7′-6"	7′-6"	7′-6"	7′-6"	7′-6"
"g"	Bar size	#6	#7	#6	#7	#7	#7	#7	#7	#7	#7	#7	#7	#6	#7	#6	#7	#7	#7	#7	#7	#7	#7	#7	#7	#6	#7	#6	#7	#6	#7	#6	#7	#6	#7	#6	#7
	Bar Spacing	12"	6"	12"	6"	6"	6"	6"	6"	6"	6"	6"	6"	12"	6"	12"	6"	6"	6"	6"	6"	6"	6"	6"	6"	12"	6"	12"	6"	6"	6"	6"	6"	6"	6"	6"	6"

SPAN, S		18′												20′											
WALL HEIGHT, H		6′		8′		10′		12′		14′		15′		6′		8′		10′		12′		14′		15′	
Max Earth Cover		10′	20′	10′	20′	10′	20′	10′	20′	10′	20′	10′	20′	10′	20′	10′	20′	10′	20′	10′	20′	10′	20′	10′	20′
Number of Rows		1	2	1	2	2	2	2	2	2	2	2	2	1	2	1	2	2	2	2	2	2	2	2	2
Pile Spacing		10′-9"	11′-0"	8′-3"	11′-0"	10′-6"	7′-0"	7′-6"	5′-3"	6′-0"	4′-0"	5′-3"	3′-6"	9′-9"	10′-0"	8′-6"	9′-6"	10′-6"	7′-9"	7′-6"	5′-6"	6′-0"	4′-3"	5′-3"	3′-9"
Cap Depth - M		3′-0"	3′-6"	3′-0"	3′-6"	3′-6"	3′-6"	3′-6"	3′-6"	3′-6"	3′-6"	3′-6"	3′-6"	3′-0"	3′-6"	3′-0"	3′-6"	3′-6"	3′-6"	3′-6"	3′-6"	3′-6"	3′-6"	3′-6"	3′-6"
Cap Width - N		4′-0"	7′-6"	4′-0"	7′-6"	7′-6"	7′-6"	7′-6"	7′-6"	7′-6"	7′-6"	7′-6"	7′-6"	4′-0"	7′-6"	4′-0"	7′-6"	7′-6"	7′-6"	7′-6"	7′-6"	7′-6"	7′-6"	7′-6"	7′-6"
"g"	Bar size	#6	#6	#6	#7	#7	#7	#7	#7	#7	#7	#7	#7	#6	#7	#6	#7	#7	#7	#7	#7	#7	#7	#7	#7
	Bar Spacing	12"	6"	12"	6"	6"	6"	6"	6"	6"	6"	6"	6"	12"	6"	12"	6"	6"	6"	6"	6"	6"	6"	6"	6"

* - See Note 2

NOTES:

1. For pile layout,see "WALL, SLAB, & PILE DETAILS" sheet.
2. Soil pressure shown in the table is equivalent uniform pressure per AASHTO LRFD.

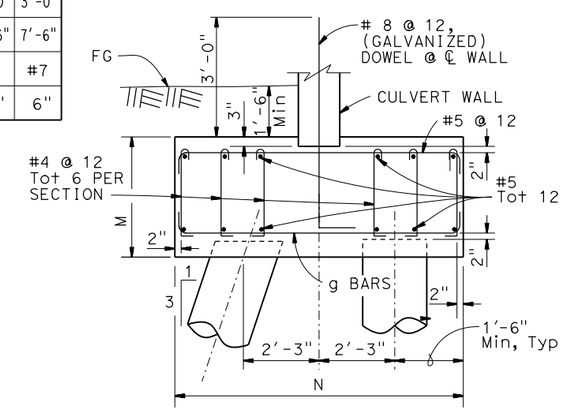

DOUBLE PILE CAP SECTION Y-Y

NO SCALE

BRIDGE STANDARD DETAILS

xs17-050-3	May 2016	The components of the Bridge Standard Details have been prepared under the responsible charge of the Technical Owner, a registered civil engineer in the State of California
FILE NO.	APPROVAL DATE	

STATE OF CALIFORNIA DEPARTMENT OF TRANSPORTATION

DIVISION OF ENGINEERING SERVICES

BRIDGE NO.

POST MILE

CIP BOTTOMLESS CULVERT FOUNDATION DETAILS

Refer to: http://www.dot.ca.gov/hq/esc/techpubs/manual/bridgemanuals/bridge-standard-detail-sheets/index.html

FILE => xs17-050-3.dgn
USERNAME => s136236 TIME PLOTTED => 13:46 DATE PLOTTED => 12-JUL-2016

ORIGINAL SCALE IN INCHES FOR REDUCED PLANS 0 1 2 3

UNIT:
PROJECT NUMBER & PHASE: CONTRACT NO.:

DISREGARD PRINTS BEARING EARLIER REVISION DATES

REVISION DATES 6-19-14 3-23-16 7-12-16 SHEET OF