DIST	COUNTY	ROUTE	POST MILES TOTAL PROJECT	SHEET No.	TOTAL SHEETS
X					

REGISTERED CIVIL ENGINEER DATE

PLANS APPROVAL DATE

REGISTERED PROFESSIONAL ENGINEER No. Exp. CIVIL STATE OF CALIFORNIA

The State of California or its officers or agents shall not be responsible for the accuracy or completeness of scanned copies of this plan sheet.

The Registered Civil Engineer for the project is responsible for the selection and proper application of the component design and any modifications shown.

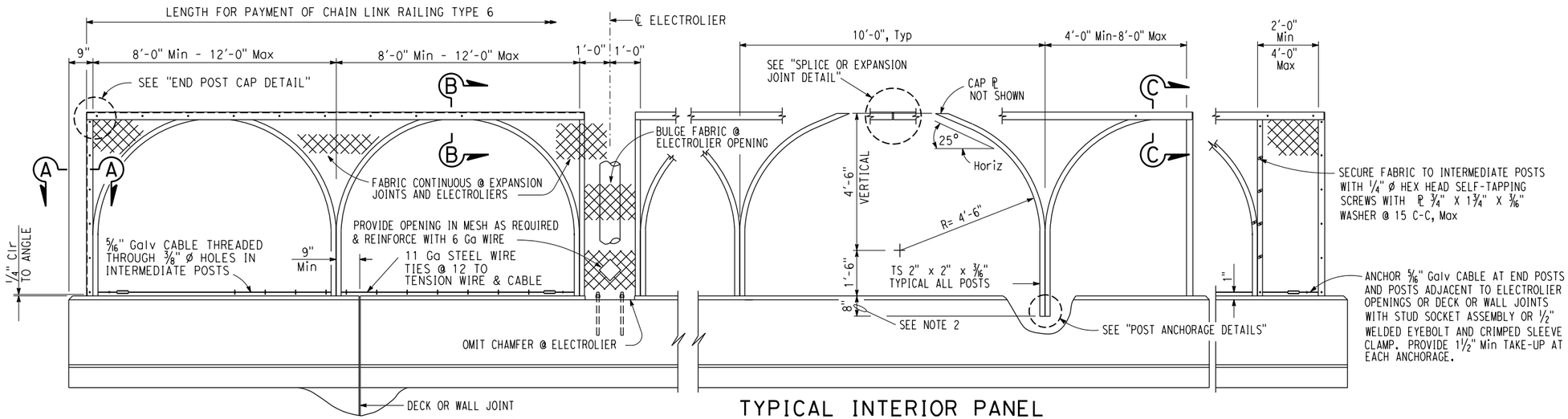

ELEVATION

1/2" = 1'-0"

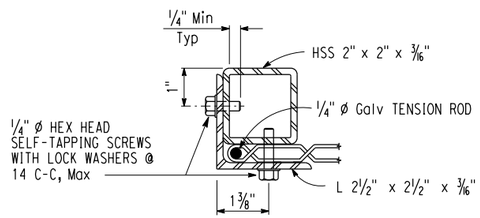

SECTION A-A

6" = 1'-0"

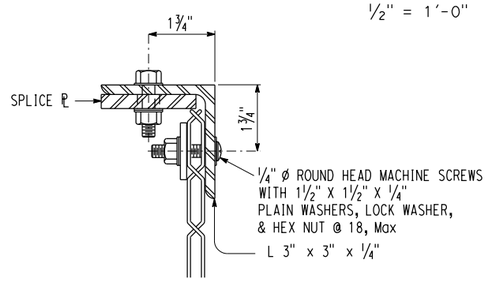

SECTION B-B

6" = 1'-0"

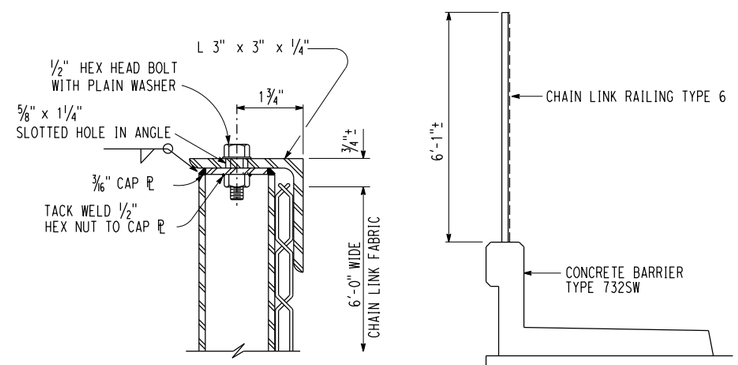

SECTION C-C

6" = 1'-0"

TYPICAL SECTION

1/2" = 1'-0"

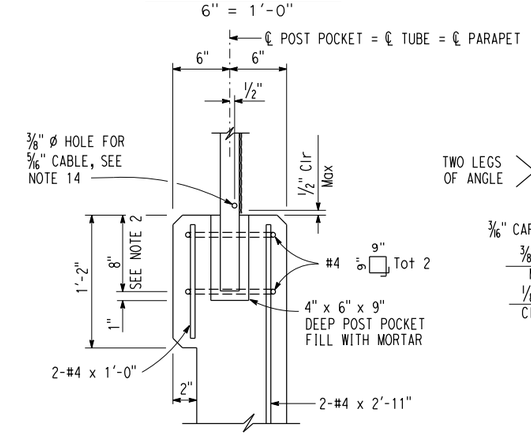

POST ANCHORAGE DETAIL

1 1/2" = 1'-0"

NOTE:
THE CONTRACTOR MUST VERIFY ALL CONTROLLING FIELD DIMENSIONS BEFORE ORDERING OR FABRICATING ANY MATERIAL.

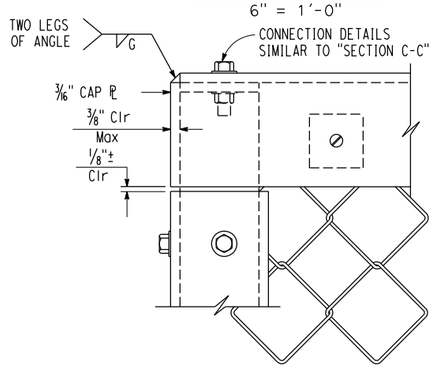

END POST CAP DETAIL

6" = 1'-0"

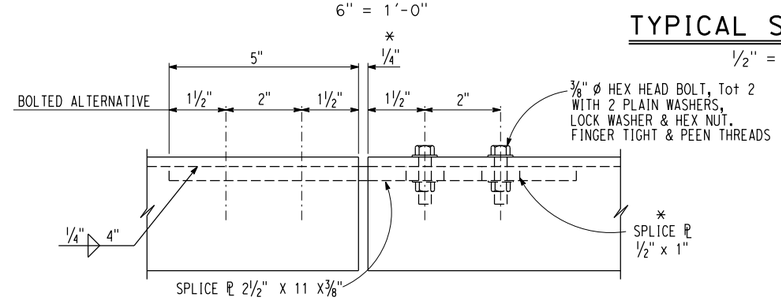

SPLICE OR EXPANSION JOINT DETAIL

6" = 1'-0"

* Expansion joint same dimension as expansion joint in deck or wall. Increase slotted hole length and splice ℙ length correspondingly.

NOTES:

1. Horizontal angle must be continuous over not less than two intermediate posts except that a shorter length is permitted at expansion joints, electroliers and other rail discontinuities.
2. One post may be embedded 6" minimum to accommodate grade changes, otherwise fabricate post lengths as required.
3. Curved posts may be rotated in plane within post pockets to accommodate curved horizontal alignment.
4. Straight posts and straight portions of curved posts must be installed normal to bridge profile grade.
5. Top horizontal angle must be parallel to bridge profile grade and must be shop bent to fit horizontal curves.
6. When railing is on slope, fabric must be placed parallel to slope.
7. Alternative details may be submitted by Contractor for Engineer's approval.
8. For details and reinforcement not shown, see "CONCRETE BARRIER TYPE 732SW" sheet.
9. See Bridge Plans for limits of Chain Link Railing Type 6.
10. Provide thimbles at all cable loops.
11. Chain link fabric to be 6'-0" wide with 1" mesh and with knuckled selvage top and bottom.
12. When railing is placed on a horizontal alignment with a radius of 150'-0" or less, thread 5/16" cable through 3/8" * welded eye rods embedded 4" into the top of the concrete parapet and equally spaced to limit the middle ordinate distance between 5/16" cable and the curve to 1" maximum.
13. Splices and expansion joints must be located at ℄ panel.
14. Holes in posts for 5/16" cable and its anchorage may be field drilled and painted with zinc rich paint.

BRIDGE STANDARD DETAILS

FILE NO.	APPROVAL DATE	
xs16-200	October 2016	*The components of the Bridge Standard Details have been prepared under the responsible charge of the Technical Owner, a registered civil engineer in the State of California*

STATE OF CALIFORNIA DEPARTMENT OF TRANSPORTATION

DIVISION OF ENGINEERING SERVICES

BRIDGE NO.

POST MILE

CHAIN LINK RAILING TYPE 6

Refer to: http://www.dot.ca.gov/hq/esc/techpubs/manual/bridgemanuals/bridge-standard-detail-sheets/index.html

FILE => $REQUEST
USERNAME => $USER *TIME PLOTTED => $TIME* *DATE PLOTTED => $DATE*

ORIGINAL SCALE IN INCHES FOR REDUCED PLANS 0 1 2 3

UNIT:
PROJECT NUMBER & PHASE: CONTRACT NO.:

DISREGARD PRINTS BEARING EARLIER REVISION DATES

REVISION DATES: 6-30-14 11-1-16 10-5-16 SHEET OF