DIST	COUNTY	ROUTE	POST MILES TOTAL PROJECT	SHEET No.	TOTAL SHEETS

REGISTERED CIVIL ENGINEER DATE

PLANS APPROVAL DATE

REGISTERED PROFESSIONAL ENGINEER No. Exp. CIVIL STATE OF CALIFORNIA

The State of California or its officers or agents shall not be responsible for the accuracy or completeness of scanned copies of this plan sheet.

The Registered Civil Engineer for the project is responsible for the selection and proper application of the component design and any modifications shown.

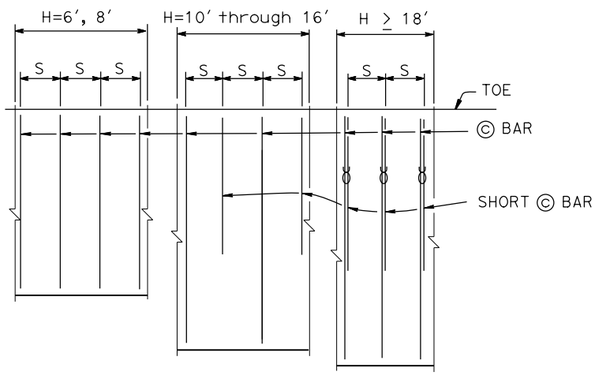

PLAN

NO SCALE

NOTES:
Only ⓒ bars shown
"S" is ⓒ bar spacing, see table
ϒ: 2 bar bundle

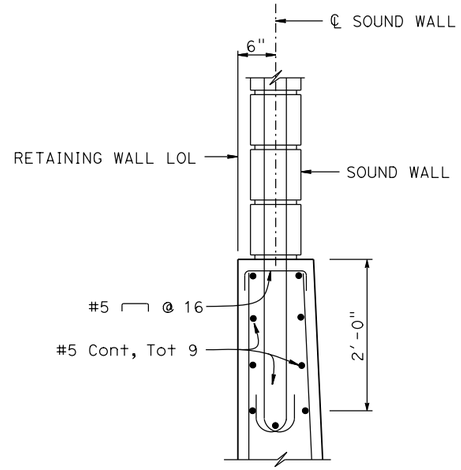

DETAIL A

1" = 1'-0"

NOTES:

1. For sound wall and retaining wall architectural finish or texture see details elsewhere in Project Plans.
2. For details not shown and drainage notes, see B3-5
3. Footing cover, 1'-6" minimum
4. For sound wall reinforcement, see "SOUND WALL - MASONRY BLOCK ON RETAINING WALL" sheet

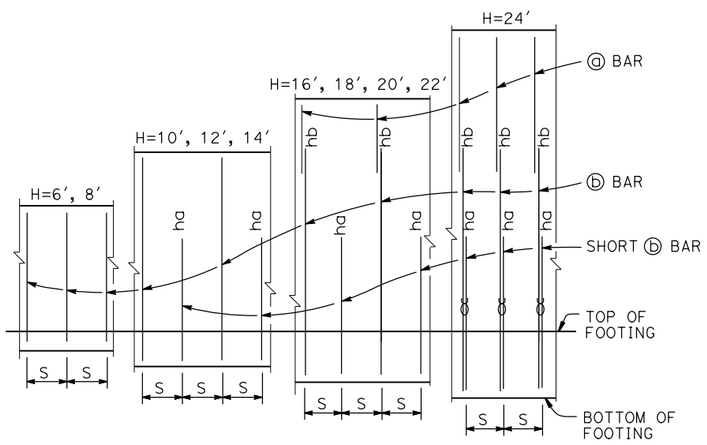

ELEVATION

NO SCALE

NOTES:
"ha" and "hb" above ⓑ bars indicate distance from top of footing to upper end of ⓑ bars, see table.
"S" is ⓑ bar spacing, see table.
ϒ : 2 bar bundle

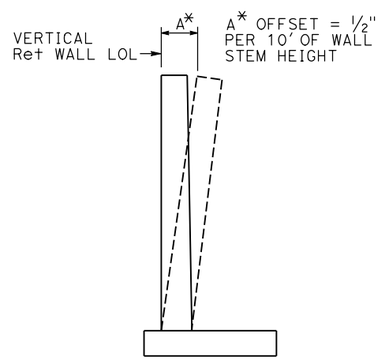

WALL OFFSET

No scale

Values for offsetting forms to be determined by the engineer

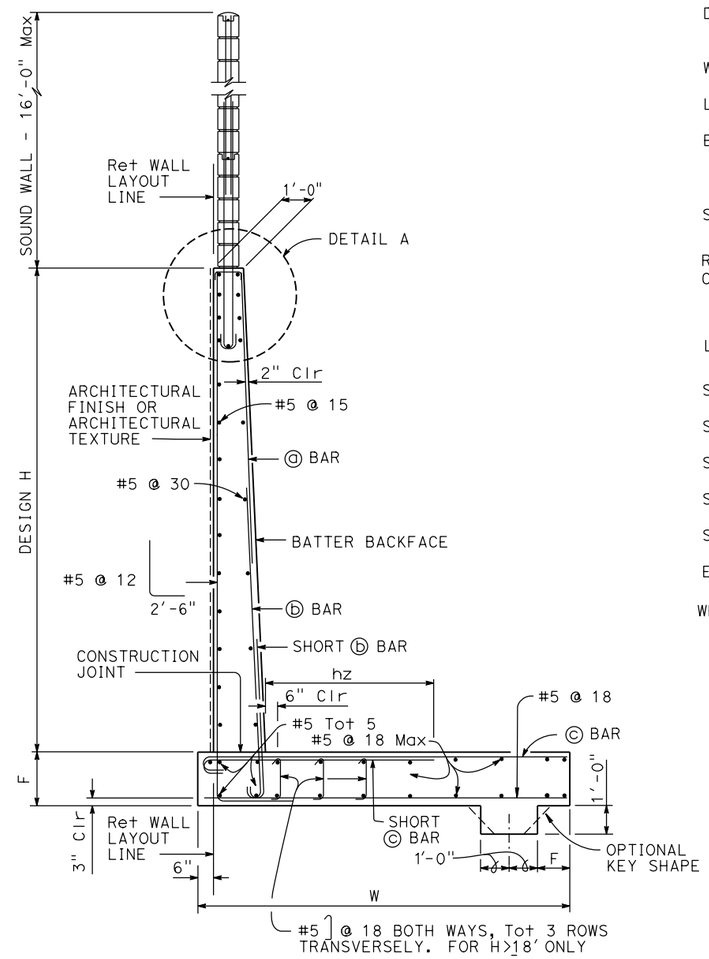

SPREAD FOOTING SECTION

⅜" = 1'-0"

DESIGN DATA

Design: AASHTO LRFD Bridge Design Specifications 4th edition with California Amendments

WS: 33 psf on sound wall

LS: Varied surcharge on level ground surface

EQE: Mononabe-Okabe Method
K_h = 0.3
K_v = 0.0

Soil: Ø = 34°
γ = 120 pcf

Reinforced Concrete: f'c = 3600 psi
fy = 60,000 psi

Load Combinations and Limit States

Service I	Q=1.00DC+1.00EV+1.00EH+1.00LS+0.30WS
Service II	Q=1.00DC+1.00EV+1.00EH+1.00WS
Strength I	Q=aDC+BEV+1.50EH+1.75LS
Strength III	Q=aDC+BEV+1.50EH+1.40WS
Strength V	Q=aDC+BEV+1.50EH+1.35LS+0.40WS
Extreme I	Q=1.00DC+1.00EV+1.00EH+1.00EQD+1.00EQE

Where:

Q: Force Effects
a: 1.25 or 0.90, Which ever Controls Design
B: 1.35 or 1.00, which ever Controls Design
DC: Dead Load of Structure Components
EV: Vertical Earth Fill Pressure
LS: Live Load Surcharge
EQE: Seismic Earth Pressure
EQD: Soil and Structure Components Inertia. Soil inertia ignored for stem design
WS: Wind Load on Sound Wall and Barrier

BRIDGE STANDARD DETAILS

xs14-340-1	July 2014	The components of the Bridge Standard Details have been prepared under the responsible charge of the Technical Owner, a registered civil engineer in the State of California
FILE NO.	APPROVAL DATE	

STATE OF CALIFORNIA DEPARTMENT OF TRANSPORTATION

DIVISION OF ENGINEERING SERVICES

BRIDGE NO.

POST MILE

RETAINING WALL TYPE 5SW-DETAILS NO. 1

Refer to: http://www.dot.ca.gov/hq/esc/techpubs/manual/bridgemanuals/bridge-standard-detail-sheets/index.html

FILE => xs14-340-1.dgn
USERNAME => s136236 TIME PLOTTED => 10:45 DATE PLOTTED => 18-JUL-2016

ORIGINAL SCALE IN INCHES FOR REDUCED PLANS 0 1 2 3

UNIT:
PROJECT NUMBER & PHASE: CONTRACT NO.:

DISREGARD PRINTS BEARING EARLIER REVISION DATES

REVISION DATES 6-19-14 7-14-16 SHEET OF