Executive Summary

Integrated Dynamic Transit Operation (IDTO) applications demonstrate great potential for improving transit service. The IDTO algorithms and user applications are developed to allow holding at bus stops to meet with connecting passengers (Connection Protection or TCP). IDTO can potentially reduce travel time and improve connectivity for a greater number of travelers. By changing travel demand, it can also help congestion relief, create a more cost-effective operation and create positive changes in inter-organizational cooperation. The implementation of IDTO may potentially change the way in which transit services are operated in suburban American cities.

The California Department of Transportation (Caltrans), California Partners for Advanced Transportation Technology (PATH), Tri Delta Transit (TDT), Contra Costa Transportation Authority (CCTA), and Alameda-Contra Costa Transit (AC Transit) have been investigating the benefits of IDTO since 2016. This study included case studies of IDTO applications in typical suburban transit operations for the route network of AC Transit. This research is an extension of a project that was recently sponsored by Caltrans. The overall goal of this proposed study is to revolutionize suburban transit operations through the deployment of IDTO.

PATH developed a test plan that specified major aspects of the field operational tests, including procedures for launching IDTO, performance monitoring, system management, data collection and analyses, and user activity tracking. Working with AC Transit, PATH investigated the system map and historic data to determine areas where transit delays were most frequent. They screened the connected routes and connection stops having significant connection protection needs and developed terminal mounting and/or application installation plans for buses.

This project is the Phase II+ of the IDTO system research which focuses on the development and evaluation of the R-TCP for the east bay service area served by AC Transit. The R-TCP function enables the district-wide optimization for dynamic bus departure with an improved algorithm taking into factors transfer traveler needs, all-passenger delays, and dispatching limitations/ requirements. Beyond the single-site connection protection, the R-TCP has been carried out to be more realistic and deployable for an agency serving a regional area. During the two-month quasi-experimental test, 2,137 scheduled transfer trip pairs and 29,918 real trips have been investigated to demonstrate the benefit of notable time saving for both the travelers and the transit operators. The main study finding is that the transfer failure rates can be mitigated by 45%~60% when the R-TCP strategy is implemented in real-time transit operations.

Table of Contents

1 Introduction *7*

1.1 Overview of this Report **7**

1.2 Project Objectives **8**

1.3 Organization of the Report **8**

2 Background *9*

2.1 Project Location **9**

2.2 Transit Connectivity of AC Transit and BART **9**

2.3 Evolution of the IDTO System **10**

2.4 Concept and Goal of RTCP **11**

3 Development of R-TCP *13*

3.1 System Structure **13**

3.2 R-TCP workflow **14**

3.3 Database Structure and Data Management **15**

3.4 The Backend R-TCP Engine **16**

3.4.1 Real-time Monitoring of Multi-Trip Updates 16

3.4.2 Decision Support Engine 16

3.5 Application Interfaces **18**

3.5.1 Driver Interface API 18

3.5.2 MOD Trip Planner 19

4 Operational Test and Performance Evaluation *21*

4.1 Connectivity Statistics **21**

4.1.1 Connected Stops and Routes 21

4.1.2 Transferrable Trips 23

4.1.3 Issues of Transfer Time 23

4.1.4 Potential Time Saving 24

4.2 FOT Implementation **26**

4.2.1 Quasi-Experimental Test 26

4.2.2 Field Test 30

5 Conclusions and Future Research *32*

5.1 Summary of accomplishments and findings **32**

5.2 Recommendations and Future Research **33**

List of Figures

Figure 2-1. System Map of BART, ACT and their connections 10

Figure 3-1. System Diagram of R-TCP Application 14

Figure 3-2. Workflow of R-TCP Operation 15

Figure 3-3. Diagram of real-time monitoring of multi-trip updates 16

Figure 4-1. Distribution of BART-to-bus transfer time among the route network 23

Figure 4-2. Transfer-from Trip Delay Statistics along the day 24

Figure 4-3. Historical BART Delays and their Effects on Transfers 25

Figure 4-4. TCP Rates @ BART Hayward Station to ACT Line 56 27

Figure 4-5. TCP rate @ BART 12TH St Station to ACT Line 19 28

Figure 4-6. TCP rate @ BART Fruitvale Station to ACT Line 21 29

Figure 4-7. Transfer Fail Reduction by Implementing Connection Protection 30

List of Tables

Table 4-1. Connected Stops and Routes in the Entire ACT Area 22

Table 4-2. Methodologies for Different Test Types.....26

Table 4-3. TCP Rates @ BART Hayward Station to ACT Line 56 27

Table 4-4. TCP Rates @ BART 12TH St Station to ACT Line 19 28

Acronyms and Definitions

AVL	Automatic Vehicle Location
BART	San Francisco Bay Area Rapid Transit
Caltrans	California Department of Transportation
DRT	Demand Responsive Transit
FOT	Field Operational Test
GTFS	General Transit Feed Specification
IDTO	Integrated Dynamic Transit Operation
PATH	California Partners for Advanced Transportation Technology
T-CONNECT	Connection Protection
TCP	Transit Connection Protection
R-TCP	Regional Transit Connection Protection

1 Introduction

1.1 Overview of this Report

This project aims to develop and evaluate the Regional Transit Connection Protection (R-TCP) component of the Integrated Dynamic Transit Operation (IDTO) system to ensure delivery of significant and sustainable improvements to suburban transit services including transferring, ride-sharing and time-saving commutes.

The IDTO system and its supportive applications, investigated in this project, are built upon the IDTO framework and prototype systems developed during the previous phase. These systems include the IDTO server, the Mobile App, and the Driver-Vehicle Interfaces (DVI). The IDTO server hosts the decision support tool, data collection and database, and messaging interfaces. The Mobile App enables interaction with travelers to obtain trip demand information and requests, while the DVI facilitates communication between transit operators, dispatch centers, and traveler requests.

The R-TCP application is the transfer protection for a regional area beyond the single-site TCP (also denoted as T-CONNECT in the previous project phases) previously developed and studied. To formulate R-TCP as a network optimization problem, we've upgraded beyond the T-CONNECT algorithm developed in previous project phases with the following specific considerations:

1. Task dependencies: The tasks in transit operation are the routes and trips that need to be covered on a large scale along the BART corridor. The dependencies between tasks can be represented by the sequence of stops on each route and the timing requirements for each trip.
2. Objective function: The objective function is to minimize the total travel time when delays of connected trips take place, trading off between avoiding additional transfer time and extending the trip leg time.
3. Mathematical model: A linear programming model has been used to adjust particular stop departure time in real-time, subject to various constraints such as overall on-schedule performance, the impact on downstream connections, and other dispatch requirement.
4. Robustness: The algorithm is made more robust by incorporating uncertainty in demand and traffic conditions reflected in real-time operational data, such as by introducing time distribution instead of fixed timelines, and by using scenario-based optimization.

With the integrated functions and features, the R-TCP application has been investigated and tested at the East Bay Area served by AC Transit in this phase of the project. Under the sponsorship of Caltrans, the PATH project team and AC Transit have devoted efforts to investigate the benefits

of R-TCP. The combination of innovative real-time data capture and data management methodologies has proven to improve dynamic transit applications, expand the horizon for public transit management, and facilitate better operational and planning decisions.

1.2 Project Objectives

The project has the following objectives:

1. Identify and analyze the current state of regional transit connections: This objective involves evaluating the existing regional transit network, including available connection types, service levels, and any gaps or barriers.
2. Assess the demand for regional transit connections: This objective involves analyzing the travel patterns and needs of regional transit users, including the demand for multi-segment trips, the impact of current schedule alignment on traveler behavior, and issues related to transfer activities.
3. Evaluate the effectiveness of the proposed application: This objective involves monitoring and assessing the impact of the implemented dynamic operation strategy, including travel time savings, changes in travel behavior, and any negative outcomes.
4. Recommend an implementation plan for the entire district: This objective involves creating a proposal for implementing the application, identifying project opportunities such as federal or state pilot studies or deployment-oriented programs.

Overall, the study objectives of this project aim to improve regional transit connectivity and accessibility, enhance regional mobility, and promote sustainable transportation options.

1.3 Organization of the Report

This report is organized as follows: Chapter 2 describes background information on the studied area and outlines the project's scope. Chapter 3 documents the framework and upgraded development of the R-TCP system, including the system structure, the database structure, and the overall workflow. Chapter 4 focuses on the experimental tests of R-TCP, summarizing the test methodology, results, and performance evaluation from the perspectives of transit operators and travelers. Chapter 5 concludes the project and provides recommendations for future research and implementations.

2 Background

2.1 Project Location

Alameda-Contra Costa Transit District (AC Transit) is the fourth-largest public transit system in California and the largest bus-only public transit system in the United States, operating 128 bus lines with an active fleet of 633 buses. ACT provides connections with 16 other public and private transit systems, including 23 Bay Area Rapid Transit (BART) stations. AC Transit's service area of 364 square miles is home to a very diverse population; approximately 75% of the population are people of color and a large number of residents speak languages other than English. A large number of AC Transit's riders are also low-income and transit-dependent, relying on AC Transit's bus service as their main mode of transportation. AC Transit service lines connect with multiple transit agencies, including Bay Area Rapid Transit (BART), Contra Costa County Transit (CCCTA), West Contra Costa County Transit Authority (WestCAT), Golden Gate Transit. The collaboration in operation among transit systems to provide travelers with fast transfer and seamless travel experience has always been a priority gap area to be addressed by San Francisco Bay Area Transit agencies.

A large number of residents are transit dependent as indicated by how 43% of riders do not have access to a working vehicle in their household and 90% of weekday riders walk to the bus. AC Transit riders also rely on bus service to connect to BART stations and other regional transit services. Many of the transit agencies that AC Transit provides connections to also serves a wide range of disadvantaged communities.

2.2 Transit Connectivity of AC Transit and BART

AC Transit provides a robust network of bus routes that connect to Bay Area Rapid Transit (BART) stations throughout the East Bay. These bus routes allow commuters to easily access BART stations from neighborhoods and areas that may not be directly serviced by BART trains. AC Transit buses connect to BART stations such as Richmond, El Cerrito Del Norte, Ashby, Downtown Berkeley, MacArthur, Fruitvale, and Coliseum/Oakland Airport. These buses run on regular schedules and provide efficient and affordable transportation options for commuters. In addition, AC Transit offers various bus services, including local, rapid, and transbay buses, which cater to different needs and preferences of riders. Overall, the network of AC Transit bus routes connecting to BART provides convenient and accessible transportation options for commuters in the East Bay.

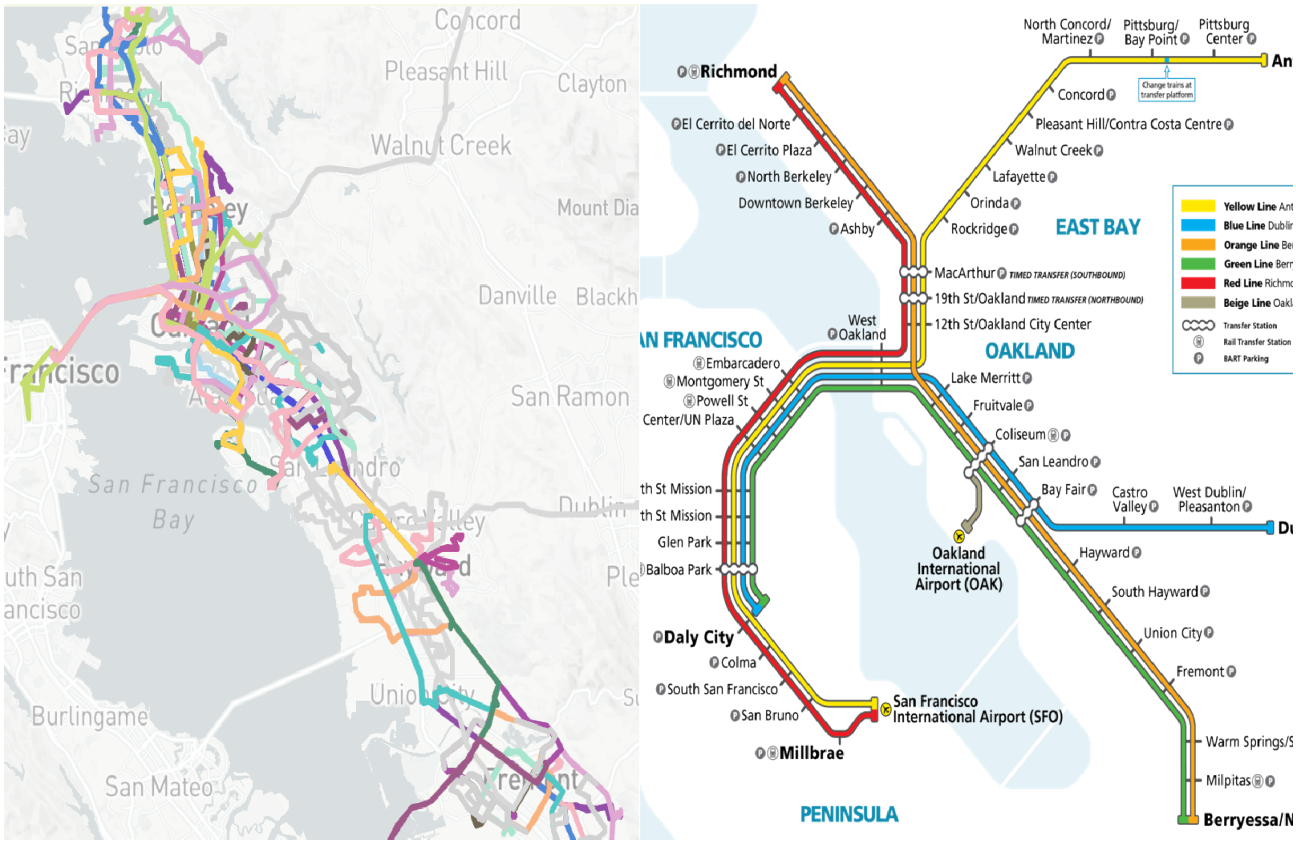

(a) ACT Network (b) BART Network

Figure 2-1. System Map of BART, ACT and their connections

From the system map of BART and AC Transit, a regional connectivity pattern has been embedded in the bus route network, which requires advanced optimization beyond single-site transfer both for the purpose of schedule planning and real-time connection protection.

2.3 Evolution of the IDTO System

The PATH team is devoted to the developments of the Integrated Dynamic Transit Operations (IDTO) system for three phases. The IDTO system aims to enable enhanced connectivity, reduce travel time and improve transit operations by providing transit connection protection, dynamic dispatch and dynamic ride-sharing applications.

The PATH project team started the investigation of dynamic transit operation system in 2015 and developed the prototype of the IDTO from 2015 to 2018 in the IDTO Phase I project. The first phase proposed the architecture and system designs of the IDTO system including a dynamic operation server, a mobile interface and a dispatch center interface. As shown in Figure 2-2 of the IDTO II Final Report, the IDTO system allows the travelers and dispatch centers to communicate through the dynamic operation server, thereby providing real-time information and operation status. In Phase I, the IDTO used an

Interface located at the Tri Delta Transit operation center that enables transit operation staff to receive requests from the IDTO Server and to communicate with bus drivers through a radio communication channel advising drivers to implement TCP operations.

The first phase has conducted several case studies to evaluate how Connection Protection can provide benefits for transit operations. For instance, at Tri Delta Transit's Hillcrest Park & Ride bus station, by adjusting the schedule time of the connecting bus routes to meet the main bus route 300, the waiting time for transfer passengers can be significantly reduced. The study shows that a large number of schedules can be adjusted, resulting in a considerable benefit for all passengers.

During Phase II, from 2018 to 2020, the PATH team developed a fully functional IDTO system that significantly improved suburban transit services. The project's overall goal was to revolutionize suburban transit operations through the deployment of IDTO. While Phase I focused on the concepts and prototypes of the IDTO systems, Phase II concentrated on full-scale implementation and field operation tests.

During Phase II+ from 2020 to 2022, the PATH team in parallel added the D-RIDE function to the established system. D-RIDE utilizes real-time transit data to enable a booking-by-prior-trip strategy for the connection between mass transit and last-mile on-demand shuttles. The benefits of reducing travel time caused by the overlap of BART trip time and DRT dispatch time have been evaluated and verified.

Together with the accomplishment documented in this report, these phases established a framework for adaptive, dynamic, on-demand responsive, and traveler-centric transit operations. The results demonstrated that future deployments could be achieved in a promising and reliable manner.

2.4 Concept and Goal of R-TCP

The proposed technology of this R-TCP project would ensure successful transfers between transit modes (e.g., bus to rail), different bus routes and among multiple transit agencies. R-TCP monitors transit operation in real-time to determine if the scheduled connection can be made. If an arriving transit vehicle is estimated to likely miss its connection, the R-TCP analyzes the network operating conditions to determine whether a TCP request will be granted and the wait time for the departing vehicle adjusted. The R-TCP automatically makes requests for bus drivers to hold the departure in order to protect the connection. The R-TCP is built upon real-time transit operation data and passenger counts to balance the wait time for the transferring passengers along with the delay incurred by the passengers.

The R-TCP will work with existing transit management systems to update the status of the trains and buses and communicate with the bus drivers. The travelers are informed of the status of the connections through customer-facing transit apps. The project will utilize non-proprietary (open source) real-time arrival data from AC Transit and BART through cloud interface for TCP request generation and will interact with transit operators through the Clever Device transit management system.

Previous studies conducted in California have found that passengers prefer short and predictable wait times in a safe environment. The implementation of TCP is expected to produce several outcomes. First, it would reduce unpredictable transit trip times for passengers. The reduced wait time at transfer stops/stations contribute to the time savings as much as 20 minutes per trip for passengers involving transfers. The trip time saving will make transit more attractive to travelers, which can directly translate to increased ridership. Commutes would become safer due to shorter wait times at transit stops/stations, especially at night. The shorter wait times would reduce the vulnerability and exposure to crimes for all riders. Aside from improved safety, riders would also have experience more seamless mobility due to the ease of making transit connections. Transit operations would become more efficient due to the TCP's role in enabling effective coordination among transit routes and transit agencies.

The goals of R-TCP (for IDTO Phase II+) study are:

1) To create seamless trips between BART and ACT bus lines, showcasing the potential of an optimized IDTO system to enhance suburban transit operations with innovative and efficient operation strategies.
2) To enhance the IDTO system by piloting the R-TCP application and conducting simulation analyses and experimental tests in the East Bay serviced region.
3) To assess the benefits of deploying R-TCP at a regional scale, such as along a train line or highway corridor, in terms of improving service quality and enhancing the transit network.

The goals and objectives of this project directly address the needs of suburban transit agencies in California and across the country. The R-TCP application developed under this project is built upon on the IDTO framework and prototype system developed in Phase I & II and the details are described in the following sections. The system is designed to support a bundle of IDTO applications, which supports integrated transit operation and at the same time provide travelers a true "one-stop shop" for gathering multimodal travel information, making smarter trip planning, interacting with transit operators to improve successful transfers, informing their needs to transit operators in real-time for innovative demand responsive transit service, and potentially integrating with ride-sharing first and last mile service to supplement transit service.

3 Development of R-TCP

The IDTO System takes into consideration the real-time transit and traffic condition information and aims to provide successful connectivity between multiple transit modes (BART to bus, bus to micro-transit) and between different bus routes of an individual agency. The system backend developed in the previous project phases has established a platform to enable various dynamic operation functions, including T-CONNECT and D-RIDE, upon which the R-TCP application in this project has been developed using a similar approach but is compatible with a larger-scope route network. Therefore, this section records only the different and improved work on the basis of previous phases.

3.1 System Structure

The system consists of four modules inclusive of the frontend and backend for both IDTO and AC Transit dispatch system, whose relations and dependencies are shown in Figure 3-1 (b).

- **App-based Trip planner**: provides the travel information of travelers (e.g., trip information, request a service for TCP, acquire transit information and status of IDTO service request), delivers travelers' requests to the backend and receives real-time trip and service notifications.
- **Server Backend**: hosts the components of the data collection and aggregation, the travel choice tool, the decision support engine, and the messaging interfaces. As the kernel part, the R-TCP application engine has been upgraded in the backend.
- **ACT Dispatch Backend:** the existing backend of the operational d service provider which needs to be modified or upgraded to be able to process and deliver new requests sent by a R-TCP application.
- **Driver Interface:** the terminal and its message display that informs the driver both on the vehicle and at the stop where a request needs to be addressed. The design of the driver interface is flexible to accommodate the specific requirements of the on-board terminal that the agency employs.

A set of algorithms, interfaces, and demonstration programs are managed by the four modules to guarantee the smooth and proficient functioning of the services. The subsequent sections present an overview of the components specific to each module.

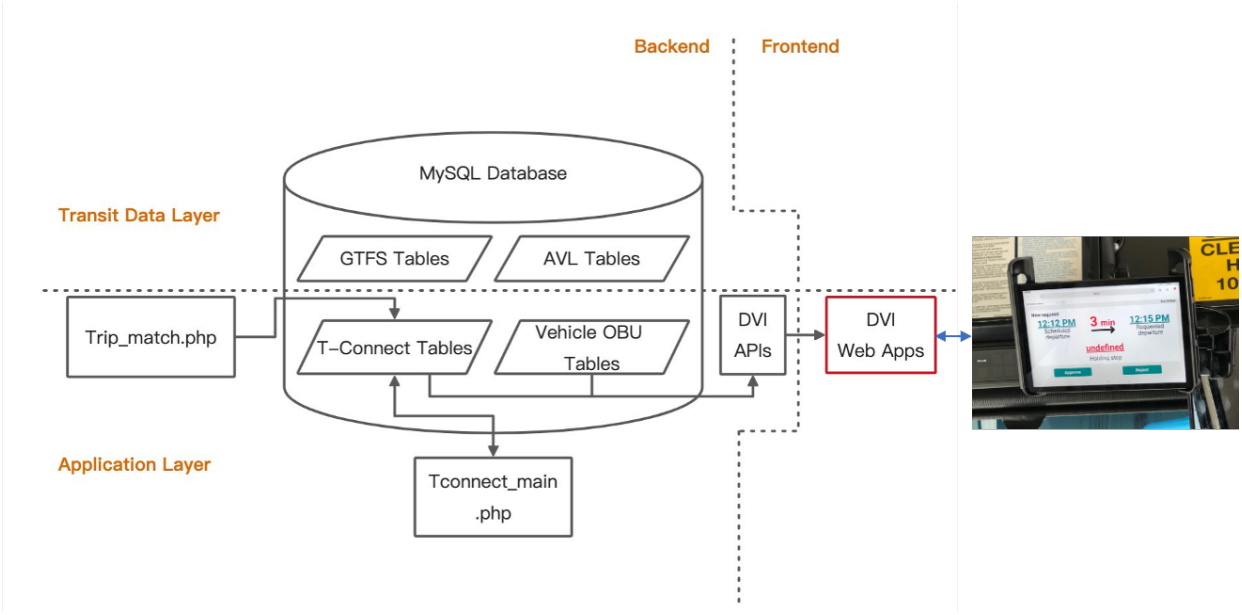

(a) Previous design of web-based driver interface

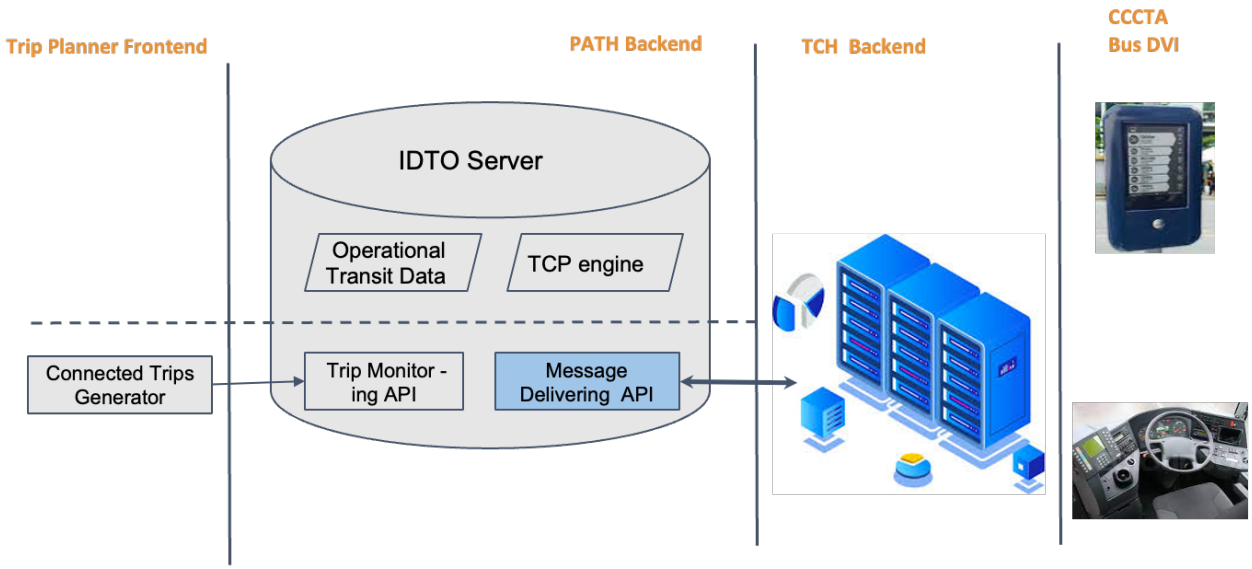

(b) New design of dispatch server-based driver interface

Figure 3-1. System Diagram of R-TCP Application

3.2 R-TCP workflow

The IDTO system monitors the real-time transit operation (e.g. delays, schedules and transfer information) of an ongoing trip that includes a transfer from a BART line to an AC Transit bus route. Once the traveler has confirmed the planned trip including a multi-segment trip demand after getting off from BART, the

system will track the user throughout the planned trip. The system will keep an update on the status of the traveler and the corresponding trains/buses, and automatically submit trip requests to the app in order to make a seamless connection between the BART segment and the bus segment. The R-TCP operation can also be regarded as a component of Mobility-as-a-service application which provides a one-shop transit service by combining and connecting all trip segments automatically.

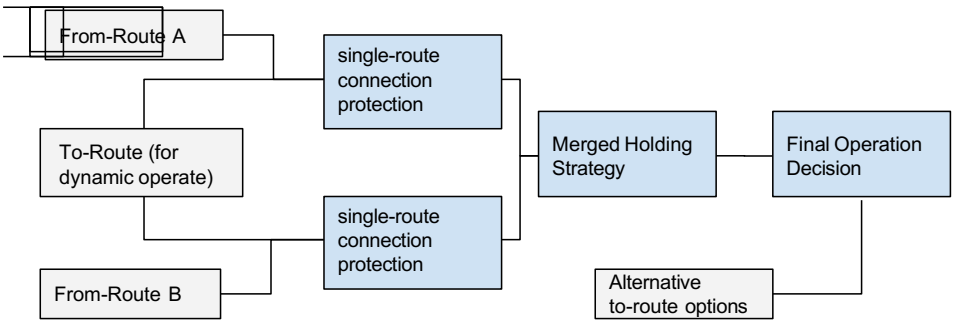

Figure 3-2. Workflow of R-TCP Operation

From a workflow perspective, the components of the upgraded system remain the same as the previous IDTO server system, consisting of a trip planner app, a backend database, a TCP engine, and a message delivery interface to support the service application. However, to achieve the R-TCP strategy, the TCP engine is the focus of the upgrade, where the algorithm now integrates multiple transfer-from and transfer-to route data, taking into account travelers' adaptive choices for multi-leg transit rides. This upgrade is particularly important for large route networks such as AC Transit.

3.3 Database Structure and Data Management

We have established an integrated IDTO database running on a backend server which collects, produces and maintains transit and traveler data by manipulating a number of SQL tables. The database covers most of the transit agencies with an existing GTFS data backend, and has stored the comprehensive data of transit agency operation (e.g., BART, AC Transit) and trip information, including:

- **Transit Agencies Data Feed**: static stops, routes, trips, schedule and real-time locations which are fetched from published GTFS feed.
- **Traveler-customized Demand**: first & last mile travel demand, real-time multi-modal connection request, user account and preferences which are associated with the module “Trip planner”
- **Service Event Status**: tracking how a request has been approved or rejected, whether a demand has been satisfied.
- **Driver-Vehicle Interface Activities**: DVI device login and logoff time, button press time, driver id and driver responses which is associated with the module “Driver-Vehicle Interface”.

3.4 The Backend R-TCP Engine

The backend server of the IDTO system simultaneously monitors two types of TCP for trip pairs: those requested by individual travelers and pre-defined events. The IDTO backend server constantly monitors real-time information on traveler requests, collects multiple requests into events, and triggers TCP events using various optimization algorithms described in the following subsections.

3.4.1 Real-time Monitoring of Multi-Trip Updates

The objective of the R-TCP application is to enhance connectivity and save travel time by providing real-time on-demand service. To achieve this, the server generates static transit operation data and pre-defined transfer routes from the static General Transit Feed Specification (GTFS) feed. Additionally, it continuously retrieves real-time updates on vehicle locations and trip times from the GTFS-rt. This enables the application to monitor multiple trip pairs that have been pre-defined, as illustrated in Figure 3-3.

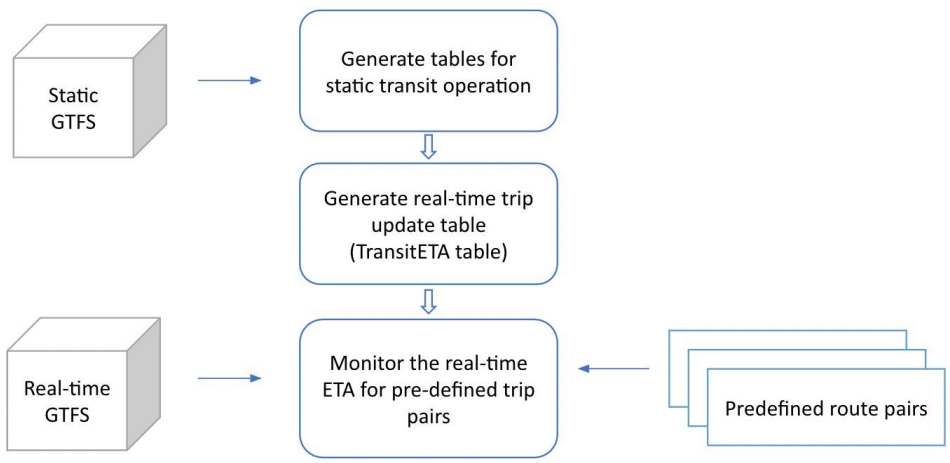

Figure 3-3. Diagram of real-time monitoring of multi-trip updates

Following the same approach of TCP, the R-TCP application uses static GTFS feed to generate transit operation tables and uses real-time GTFS feeds for monitoring transit delays. However, the R-TCP data consider the combination of multi-to-one transfer trips and one-to-multi transfer trips which impact the implementation of TCP decision algorithms.

3.4.2 Decision Support Engine

The decision support engine contains an ETA-based algorithm to monitor the BART and ACT bus operation, process travelers' requests and provide TCP request decisions. The core function of the decision support engine is to effectively and efficiently decide the connection protection events and manage the

notifications. The R-TCP decision algorithm is the core algorithm in the backend server to check trigger conditions at the trigger time to trigger the connection protection.

The trigger time is the time point when the backend server begins to make trigger decisions for the events. The trigger time is between !" − 5 and #$"% + !$&'(#)$ − 7 which comes earlier. At the trigger time, the trigger condition is set that the estimated time of arrival at the outbound trip is greater than the outbound trip STA but less than the outbound trip STA plus an extra holding time, such that

$$"*! < +' + !\$\&'(\#)\$ < "*! + ,"*'-$$

where the left-hand inequality indicates the delay of inbound trip causes transfer failure and will need the connection protection service, and the right-hand inequality indicates the latest request holding time that is constrained by an upper bound ,"*'-. The upper bound is set to 5 minutes based on the agency's policy and also the following total travel time minimization problem:

$$\min_{+} = \sum_{+\in 1"} 3_{+}(/+_{+}) + \sum_{+\in 1\ 2\in 3_{\#}} \sum_{+2} 3_{++2} + \sum_{+\in 1\ 2\in 3_{\$}} \sum_{+2} 3_{+2+2} + \sum_{+\in 1\ 2\in 4_{\#}} \sum_{+2} 3 :_{+} - {}_{+2} = {}_{+2}$$

$$+ \sum_{+\in 1\ 2\in 4_{\$}} \sum_{+2} 3 >_{+} + \sum_{+\in 1} 3_{+} - {}_{+2} ?_{+2} + \sum_{+\in 1\ 2\in 4_{\%}} \sum_{+2} 3 :_{+} - {}_{+2} = {}_{+2}$$

s.t.

$$\sum_{!\in 1} 3_{+} \leq$$

where

:bus routes

5:the bus route associated with connection protection events

6 :the inbound transit routes that have transfers to the outbound transit stations and 6 = 5 ∪ 6 ∪ 7

5 :the transit routes that arrive before the scheduled departure time of the routes in 5

6 :the transit routes that arrive between the schedule departure time and the actual departure time with connection protection on the routes in 5

7 :the transit routes that arrive later than the actual departure time with connection protection on the routes in 5.

:All feasible transfer transit stops

′ :All transit stops of the routes in 5

$_{+}$:Number of on-boarding passengers of the routes in $_{5}$ at transit stop

$_{+}'$:Travel time from transit stop to the next transit stop of the routes in $_{5}$

$_{+2}$:Travel time for transit route before the stop

$_{+2}$:Number of alighting passengers from transit route at the stop

$_{+}$:Schedule departure time of the routes in $_{5}$ for the current trip at stop

$_{+}$:Schedule departure time of the routes in $_{5}$ for the next trip at stop

$_{+2}$:Arrive time of transit at stop

:A given value to constrain the requested holding time

$_{+}$:Decision variable of requested holding time at stop for the routes in $_{5}$

The optimization problem aims to minimize the total travel time of all passengers in the route associated with TCP events. The first and the second terms are the in-vehicle travel time and waiting time of on-boarding passengers in the routes with TCP events for the entire trip. The third term is the in-vehicle travel time of the transfer passengers. The last three terms are the waiting time for the transfer passengers, including a) the waiting time of transfer passengers who can be carried in the current trip before the scheduled departure time; b) the waiting time of transfer passengers who can be carried in the current trip between the scheduled departure time and the actual departure time with TCP; c) the waiting time of transfer passengers who cannot be carried in the current trip with the TCP.

3.5 Application Interfaces

3.5.1 Driver Interface API

The most basic requirement for the on-board devices is that they need to have some form of communication ability and allow (add-on) development of message receiving and display. Here is the breakdown of the functional requirements:

- The TCP “hold message” pushed by (or polled from) the IDTO server shall be distributed to the right vehicle which is serving the transfer trip to be protected.
- The TCP “hold message” shall be displayed on an on-board terminal at a designated time, such as several minutes before the bus’s scheduled departure.
- The drivers shall have the ability to notice and view the “hold message” without distractions from driving.
- The drivers shall have an interface to respond to the request, like pressing buttons or tapping on a touch screen.

- The “hold message” shall disappear or be hidden upon a predefined condition, such as when the vehicle leaves the transfer stop or after X minutes of display, regardless of the driver’s acceptance, rejection or no response.
- The DVI (TCH) system shall log the requests and drivers’ responses with a time stamp for post-test analysis.

Receiving hold requests:

- Option 1: Have the on-board device run a server so the IDTO engine can make a HTTP/HTTPS request indicating a hold request.
- Option 2: Have the on-board device periodically make a HTTP/HTTPS request to the IDTO engine to check for holding requests.
- Option 3:Leverage the existing message distributing channel if the device has one, just call the API to deliver a text message to a specific vehicle. (This is confirmed to be available by one other vendor)

Responding to requests (Optional):

- Have the on board device make a HTTP/HTTPS request to the IDTO engine to indicate if the driver has received the request and decided to hold the bus.

Note that this API has not been officially implemented in the TCH system which AC Transit.

3.5.2 MOD Trip Planner

The IDTO backend server offers a set of endpoints for communicating with external systems, among which the trip planner is on the demand end that feeds individual trip information to the R-TCP engine. The interface endpoints are grouped into the following groups: User, GTFS, Administrative, Push Notifications, Matching, and Connection-Protection, see the detail in the separated document of “PATH Transit Go BACKEND DOCUMENTATION: Revision 0.2.1”. All end-points must be prepended with https://backend.idto.us:3335 to create the complete URL for making requests.

The endpoint of setting up a one-time connection protection request initiated by a MaaS trip planner are defined by the following description.

Synopsis:	POST ~/cpintegration/cprequest/ The endpoint parameters contain the transfer information that is monitored for possible connection protection.
Precondition:	Accept: application/json q = string
Postcondition:	Content-Type: application/json

Status code: 200 OK
404 Not Found
500 Internal Server Error

```
{
    "this_route_agency"  : <STR> (the two character ID corresponding to this_agency from 511's
        operators API),
    "this_trip_id"       : <STR> (trip_id found in this_agency's GTFS dataset),
    "next_route_agency"  : <STR> (the two character ID corresponding to next_agency from 511's
        operators API),
    "next_trip_id"       : <STR> (trip_id found in next_agency's GTFS dataset),
    "transfer_from_stop" : <STR> (stop_id found in this_agency's GTFS dataset),
    "transfer_to_stop"   : <STR> (stop_id found in next_agency's GTFS dataset),
    "transfer_time"      : <INT> (walking time between stops in mins, defaults to 3 if not provide
    "start_date"         : <STR> (strf time, %Y-%m-%d, should be date transfer from trip starts,
        not the date the transfer from trip reaches the transfer from stop),
    "end_date"           : <STR> (strf time, %Y-%m-%d, should be date transfer from trip starts,
        not the date the transfer from trip reaches the transfer from stop),
    "booking_id"         : <STR> (optional, remains undefined if not provided),
    "sso"                : <STR> (optional, remains undefined if not provided),
    "num_riders"         : <INT> (optional, defaults to 1 if not provided)
    "ord_id"             : <STR> (provided to partner)
}
```

---

4 Operational Test and Performance Evaluation

4.1 Connectivity Statistics

Transit agencies typically design their transit networks with transfer capability in mind, often using transfer hubs or other facilities to facilitate transfers between different lines and areas. These facilities may include dedicated transfer stations, timed transfers, or other features designed to minimize transfer times and improve overall usability. Transit agencies may also use technology such as real-time arrival information and digital signage to make it easier for riders to navigate between different transit lines and areas.

One challenge with transit transfer capability is ensuring that transfers are seamless and easy for riders to navigate. This can require coordination between multiple transit agencies or service providers, as well as careful planning and design of transfer facilities and services. Additionally, transit agencies may need to consider issues such as accessibility, safety, and security when designing transfer facilities, to ensure that all riders are able to access and use them effectively.

In this project, the concept of *Connectivity* is described by the attributes of

- Connected Stops and Routes
- Transferable Trips
- empirical transfer time

As the basis of connectivity analysis, all BART Stations that have the possible to transfer to ACT Bus Routes are listed in Appendix A.

4.1.1 Connected Stops and Routes

The *Connected Stops and Routes* are found based on the spatial relations of a BART station and a bus stop, i.e., the two transfer stops are within walkable distance. For BART-to-bus transfers, there is always a transit hub near a BART station that has a number of bus lines passing, making it easier to locate the connected stop and the corresponding bus route. Additional screening criteria have been considered including that, i) the bus stop cannot be the last stop of a route, otherwise there is no way to transfer; ii) the direction of the bus route cannot be opposite to the BART trip direction, otherwise the transfer only theoretically stands.

Table 4-1. Connected Stops and Routes in the ACT Area

BART Station	UCTY	WARM	RICH	DELN	PLZA	DBRK	12TH	12TH	LAKE	FTVL	SANL
ACT Route (transfer stop_id)	232.D0 (Stop: 4667)	239.D0 (Stop: 5606)	70.D1 (Stop: 5560)	7.D0 (Stop: 6230)	72.D1 (Stop: 872)	67.D1 (Stop: 5251)	19.D1 (Stop: 2030)	18.D0 (Stop: 2476)	18.D1 (Stop: 2309)	54.D0 (Stop: 2145)	34.D0 (Stop: 4367)
	232.D1 (Stop: 4667)	239.D1 (Stop: 5606)	71.D1 (Stop: 5561)	72.D1 (Stop: 6231)	72M.D1 (Stop: 872)	7.D1 (Stop: 5251)	20.D1 (Stop: 2030)	51A.D0 (Stop: 2476)	62.D0 (Stop: 2309)	39.D1 (Stop: 2837)	34.D1 (Stop: 4367)
	99.D0 (Stop: 4667)	215.D1 (Stop: 5607)	74.D1 (Stop: 5562)	72M.D1 (Stop: 6231)	71.D1 (Stop: 873)	88.D0 (Stop: 5866)	40.D0 (Stop: 6098)	6.D0 (Stop: 2476)	88.D1 (Stop: 3316)	O.D0 (Stop: 2838)	35.D0 (Stop: 4367)
	99.D1 (Stop: 4667)	217.D1 (Stop: 5607)	76.D0 (Stop: 5562)	72R.D1 (Stop: 6232)	79.D0 (Stop: 874)	51B.D1 (Stop: 6090)	88.D1 (Stop: 2036)	18.D1 (Stop: 2477)	96.D0 (Stop: 3316)	14.D0 (Stop: 2839)	35.D1 (Stop: 4367)
	97.D1 (Stop: 4669)	215.D0 (Stop: 5889)	76.D0 (Stop: 5562)	76.D0 (Stop: 862)	72.D0 (Stop: 875)	79.D1 (Stop: 6090)	14.D0 (Stop: 2068)	72.D1 (Stop: 2477)	62.D1 (Stop: 3317)	62.D0 (Stop: 2840)	28.D0 (Stop: 4368)
	216.D0 (Stop: 4670)	217.D0 (Stop: 5889)	72M.D1 (Stop: 5563)	76.D0 (Stop: 862)	72M.D0 (Stop: 875)	18.D1 (Stop: 6106)	14.D1 (Stop: 2069)	72M.D1 (Stop: 2477)	88.D1 (Stop: 3317)	20.D1 (Stop: 2841)	10.D0 (Stop: 4370)
	200.D0 (Stop: 4671)		72M.D0 (Stop: 5564)	72R.D0 (Stop: 866)	79.D1 (Stop: 882)	18.D0 (Stop: 649)	12.D0 (Stop: 2475)	72R.D1 (Stop: 2477)	96.D0 (Stop: 3317)	21.D1 (Stop: 2841)	1T.D1 (Stop: 6164)
		MCAR	74.D0 (Stop: 5565)	72.D0 (Stop: 867)		51B.D0 (Stop: 649)	72.D0 (Stop: 2475)	33.D1 (Stop: 6096)	96.D1 (Stop: 3317)	54.D1 (Stop: 2842)	
		57.D1 (Stop: 2172)	76.D1 (Stop: 5565)	72M.D0 (Stop: 867)		6.D0 (Stop: 649)	72M.D0 (Stop: 2475)	1T.D1 (Stop: 6173)		19.D0 (Stop: 2843)	
		57.D0 (Stop: 2176)	71.D0 (Stop: 5566)	**ASHB**		79.D0 (Stop: 649)	72R.D0 (Stop: 2475)	1T.D0 (Stop: 6174)		20.D0 (Stop: 2843)	
	MLPT	18.D0 (Stop: 3614)	**SHAY**	12.D0 (Stop: 549)			96.D0 (Stop: 2475)	33.D0 (Stop: 6187)		21.D0 (Stop: 2843)	
	217.D1 (Stop: 6047)	57.D0 (Stop: 3688)	99.D1 (Stop: 1753)	12.D1 (Stop: 550)				6.D1 (Stop: 6295)		51A.D1 (Stop: 2844)	

4.1.2 Transferrable Trips

Each Connected Stop and Route in the system has multiple trips that run successively throughout the day. Among these, trips that have a moderate transfer time between the BART from-arrival and the bus to-departure schedules are considered *Transferrable Trips*. Similar to the previous section, these trips are conditionally selected by meeting either of the two criteria: i) the headway to the next trip run is greater than 25 minutes, or ii) it is the last run of the entire day.

The comprehensive list of Transferrable Trips is covered in Appendix B.

4.1.3 Issues of Transfer Time

It is noted that travelers need to wait at the transfer location to ride on the outbound bus. The transfer time is expected to be the schedule alignments between the inbound BART route (from-route) and the outbound bus line (to-route), which will be added to the entire transit travel time. Normally the transfer time is set to be large enough to allow variable walking time from from-stop to to-stop, while it cannot be too big to result in a long waiting at the to-stop.

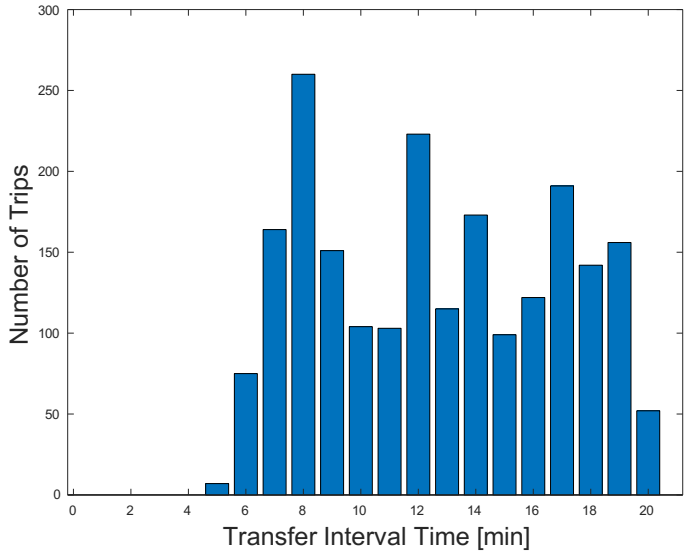

Figure 4-1. Distribution of BART-to-bus transfer time among the route network

When the transfer-from vehicle delay occurred, the transfer time would be extended until the arrival of the next run of the transfer-to line. As shown in Figure 4-2 (a), the average delays are around four minutes, and there are no notable differences in delays throughout the day, except for a slightly longer delay of 1 minute during 8-9 pm, which is after the afternoon peak hours. The averages of those major delays causing

transfer failures range from 10 to 16 minutes, and there is also a higher likelihood of experiencing transfer failures at 8-9 pm as indicated in Figure 4-2 (b).

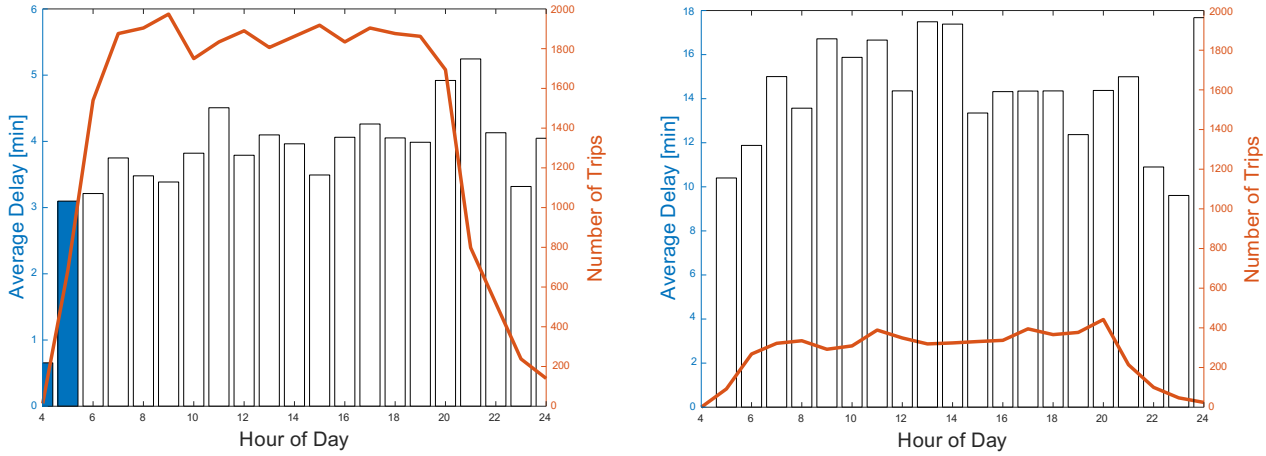

(a) all trip delays

(b) delays result in additional transfer time

Figure 4-2. Transfer-from Trip Delay Statistics along the day

4.1.4 Potential Time Saving

To assess the potential impacts of R-TCP, we use the following metrics in this section and throughout the report:

- The percentage of trips that may experience failed transfer because of from-trip delay (*transfer at risk*);
- The percentage of trip transfers that can be protected among the above transfers at risk, denoted as *protectable rate* hereafter;
- The saved additional waiting time for the next bus versus the required holding minutes.

An example site has been investigated as a pilot for assessing the potential TCP benefits as below. Figure 4-3 and the following interpretations illustrate the mechanism and effectiveness of the TCP strategy.

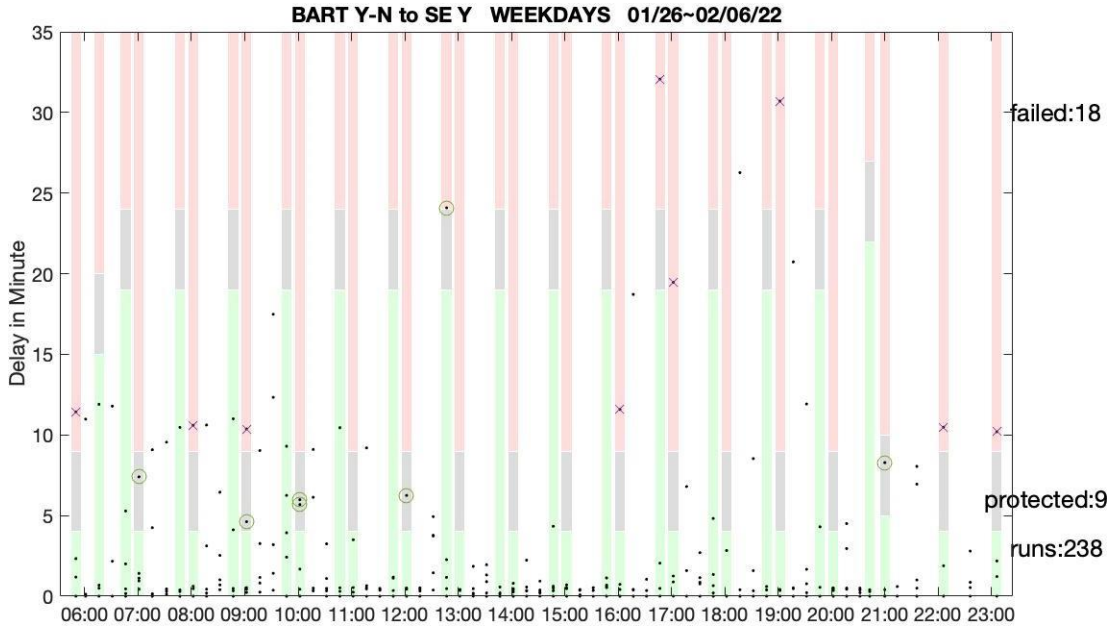

Figure 4-3. Historical BART Delays and their Effects on Transfers

Investigation Duration: 01/26/22 - 02/04/22, weekdays

Valid Trip Runs: 238 runs for 7 days

34 transfer trips per day are under monitoring. First trip: 6:07a; Last trip: 11:12p

Delay Range in the figure:

'Green' - minor delay, successful transfer

'Grey' - medium delay, possible transfer fail but can be protected by implementing CP
Events marked by 'O'

'Red' - big delay, the passengers on the delayed BART cannot catch the planned bus
Events marked by 'X'

Potential Benefit by Implementing TCP:

27 out of 238 (11.3%) transfer trips have significant (BART) delays that may cause failed transfer;

9 out of 27 (33%) transfer trips can be protected by a responded bus holding within 5 minutes;

2 more trips in the evening (10:00-11:00 pm) could be protected if we permit an up to 6 mins holding strategy.

An average of 94-minute transfer waiting time per day could be saved by allowing a total 5.5-minute bus holding per day.

4.2 FOT Implementation

To study the connectivity between BART and AC Transit Bus inclusive of all connected BART stations, the PATH project team adopted a three-stage test including the historic data test (described in the previous section), the quasi-experimental test and the field operation test (FOT) test whose methodologies are outlined in Table 4-2 .

Table 4-2. Methodologies for Different Test Types

Components of Test	**Historic Data Test**	**Quasi-Experimental Test**	**Field Operational Test**
Route Static Data	Yes	Yes	Yes
Trip Realtime Data	Partially	Yes	Yes
Algorithm Run	Off-line	Real-time	Real-time
Passenger Demand	No	No	No
Driver in-the-loop	No	Simulated	Yes

4.2.1 Quasi-Experimental Test

A quasi-experimental test was conducted to assess the performance of the connection protection application in a large-scale transit network such as the AC transit service area. Real transit trip data and derived transfer patterns were aggregated, while a real-time engine ran in the background throughout the testing period. The only missing component in the workflow was driver participation, yet the results of the proposed new operation application were still convincing. The test was carried out over a period of 63 days and involved:

- 15 connected sites
- 109 transfer routes
- 2137 scheduled transfer trip pairs
- 29,918 real trips

The data collected during the one-month test was fed into the IDTO system in real-time to assess and evaluate the R-TCP strategy. The setup was monitored and post-analyzed to draw conclusions about the system's effectiveness.

Table 4-3. TCP Rates @ BART Hayward Station to ACT Line 56

	Schedule	05:45	06:45	07:45	08:45	09:45	10:45	11:45	12:45	13:45	14:45	15:45	16:45	17:45	18:45	19:45	Avg.
13-min Group	Transfer fail rate	0.07	0.07	0.14	0.21	0.14	0.21	0.07	0.21	0.21	0.14	0.21	0.07	0.07	0.07	0.14	0.138
	Protectable rate	0%	0%	100%	67%	100%	67%	0%	33%	33%	50%	33%	100%	0%	100%	50%	**52%**
7-min Group	Transfer fail rate	0.36	0.21	0.36	0.29	0.29	0.14	0.43	0.21	0.21	0.21	0.43	0.36	0.50	0.36	0.36	0.314
	Protectable rate	100%	67%	60%	100%	75%	100%	50%	100%	67%	33%	100%	100%	43%	60%	80%	**74%**

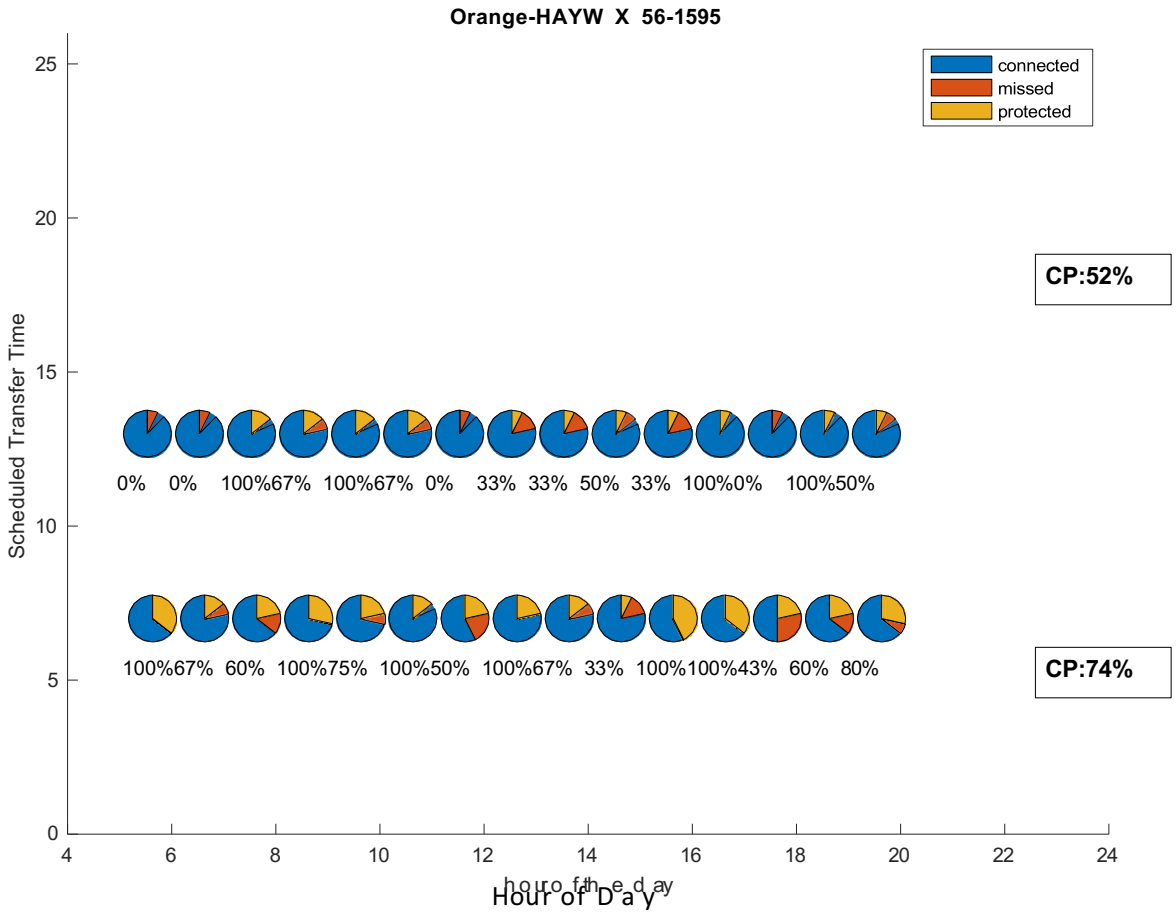

Figure 4-4. TCP Rates @ BART Hayward Station to ACT Line 56

The overall protectable rates of the 13-min and 7-min transfer gap trips are 52% and 74% respectively, which can be interpreted as the schedule aligned transfers are more likely to be guaranteed when the TCP strategy is implemented.

Table 4-4. TCP Rates @ BART 12TH St Station to ACT Line 19

	Schedule	06:48	07:48	08:48	09:48	10:45	11:45	12:45	13:45	14:45	15:45	16:45	17:45	18:45	19:45	20:45	Avg.
>10-min Group	Transfer fail rate	0	0	0	0	0	0	0	0	0	0	0	0	0	0	0.07	0.005
	Protected rate	-	-	-	-	-	-	-	-	-	-	-	-	-	-	0%	**0%**
<10-min Group	Transfer fail rate	0.29	0.29	0.29	0.29	0.29	0.36	0.50	0.36	0.36	0.29	0.43	0.43	0.43	0.43	-	0.357
	Protectable rate	50%	50%	50%	50%	25%	40%	14%	20%	40%	50%	33%	50%	33%	33%	-	**37.1%**

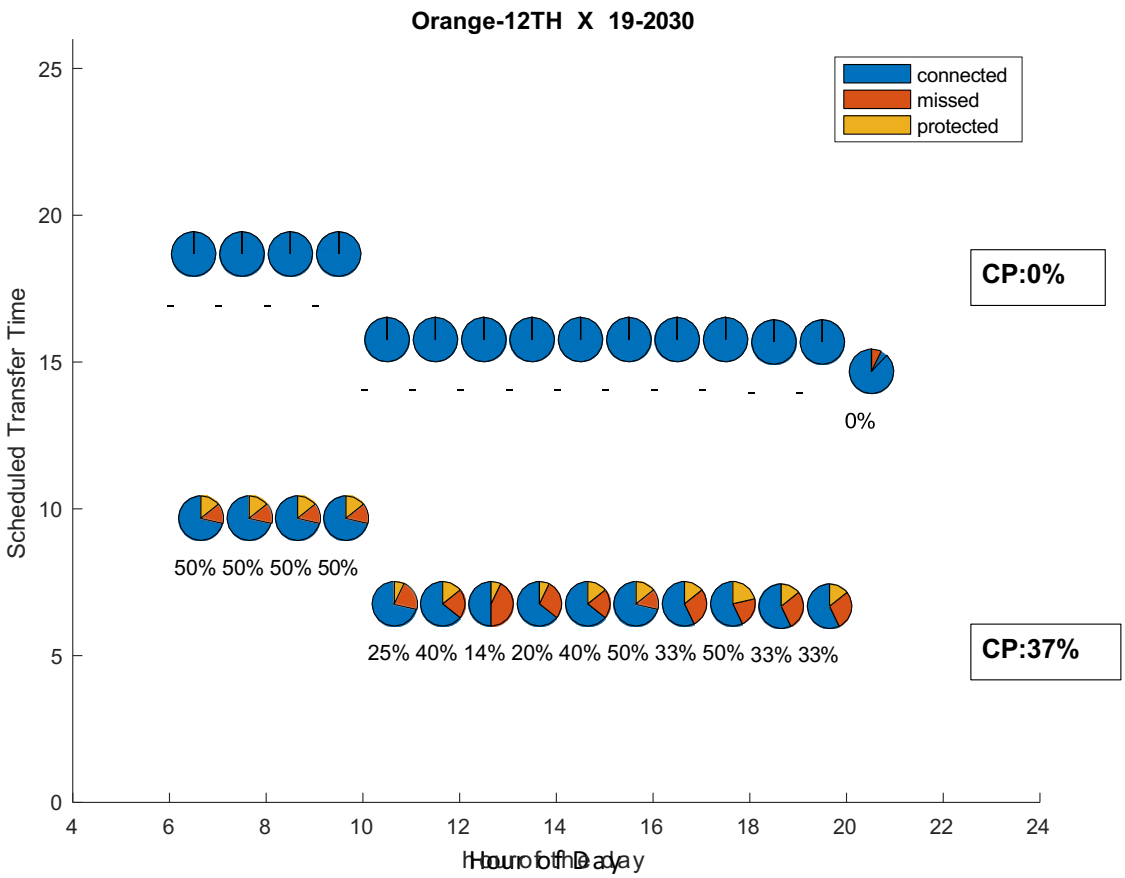

Figure 4-5. TCP rate @ BART 12TH St Station to ACT Line 19

While the 10min+ transfers are not likely to encounter delay-caused failure versus around one-third of the 10min- transfers face the risk, the overall protectable rates of the 10min+ and 10min- transfer gap trips are 0% and 37% respectively. Figure 4-6 provides the results of another site (Fruitvale) with a more

complex transfer pattern. The overall protectable rates for the 10min+ and 10min- transfer gap trips are 48% and 76% respectively.

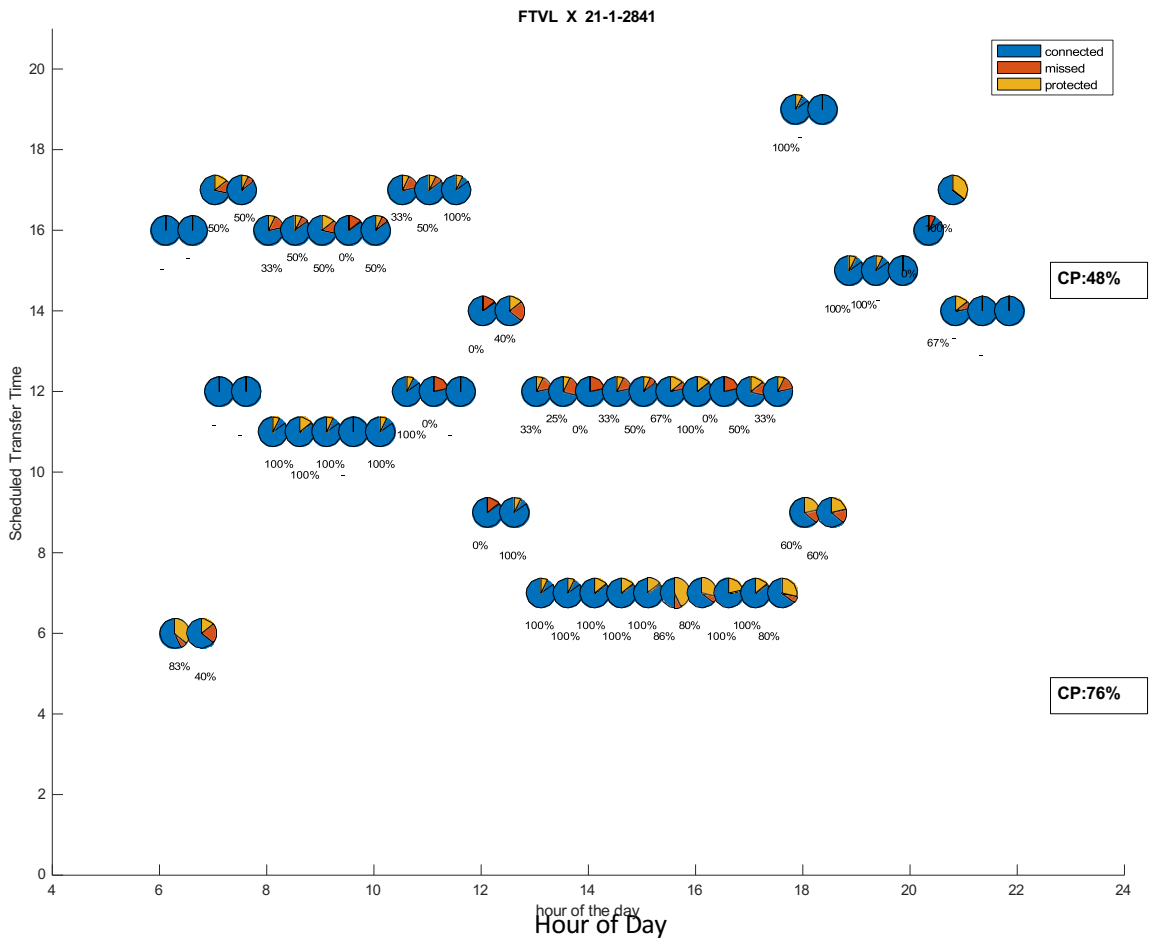

Figure 4-6. TCP rate @ BART Fruitvale Station to ACT Line 21

Including the above three examples, the full set of results for all investigated connected stops and routes are recorded in Appendix C.

To summarize the overall R-TCP benefits, Figure 4-7 illustrates the findings:

1. Transfer failure rates vary against the transfer interval time almost monotonously;
2. Transfer failure rates could **be mitigated by approximately 45%~60%** when the R-TCP strategy is implemented in real-time dynamic transit operations;

3. The protectable rates (also denoted as TCP Probabilities) have very little relevance with the scheduled transfer interval time, which is in opposition to the results of the previously illustrated example sites.

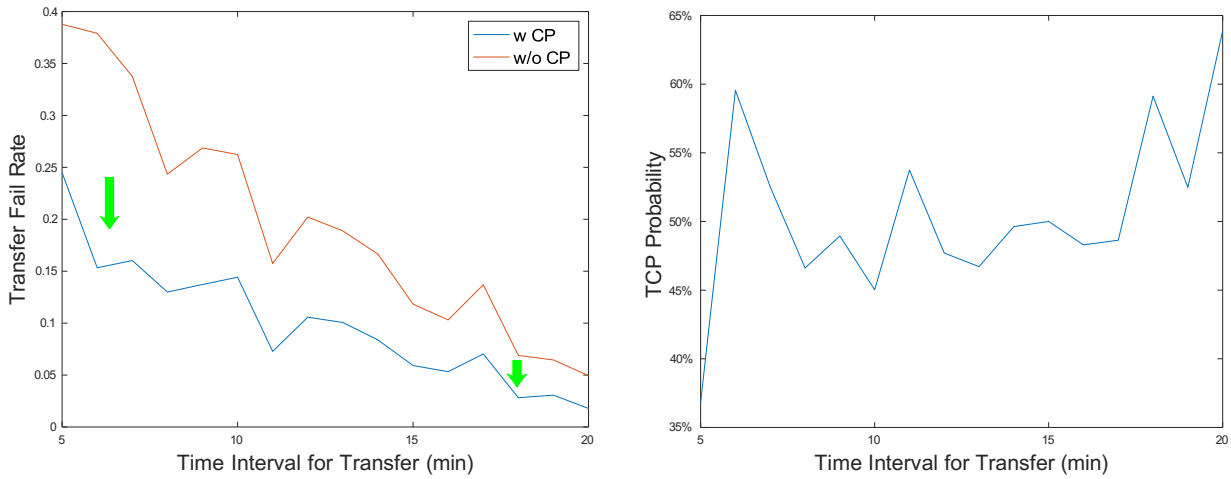

Figure 4-7. Transfer Fail Reduction by Implementing Connection Protection

4.2.2 Field Test

The plan for the Field Operation Test was recorded in the Caltrans-ACT MOU as:

PATH will work with AC Transit to determine the implementation approach, including:

- The required actions of passengers, dispatchers, drivers in the service flow

- The on-board terminal used for popping up Driver-Vehicle-Interface messages containing bus holding requests

- The format of operation data collection, storing, and logging

PATH will launch the IDTO operation through viable outreach means allowable by the Committee for Protection of Human Subjects to continuously solicit travelers to participate in the FOT throughout the test period. Throughout the FOT period, participants will be contacted for surveys via e-mail or the internet.

However, after having experienced significant delay because of the COVID pandemic and the collaborative resource constraint of AC Transit, the real FOT has not been carried out in the AC Transit service area.

While an FOT is an ideal method for evaluating dynamic transit operation, the quasi-experimental test we have completed can still be a valuable substitute. Although the quasi-experimental test didn't embody drivers' intervention to the same extent as an FOT, the workflow is almost the same and can still provide accurate evaluation for the effectiveness of the dynamic transit operation. The test is designed to control for real situations and confounding variables such as the undesirable human factor design for drivers and passengers. Furthermore, the quasi-experimental test is more feasible and flexible in terms of time and resources, making it a practical alternative when a real operation cannot be interrupted. From the perspective of data analysis, the quasi-experimental test still yields valuable information and the results have minor bias from what an FOT can provide.

5 Conclusions and Future Research

5.1 Summary of accomplishments and findings

The multi-phase IDTO project aims at developing and implementing a full-scale Integrated Dynamic Transit Operation (IDTO) prototype system that enables T-CONNECT and D-RIDE services. During the Phase II+ project, the project team accomplished the R-TCP study in the East Bay Area by conducting system development and experimental tests.

- The IDTO server, which hosts data collection and management tools, a decision support engine, and application interfaces, has been significantly enhanced to better respond to network-wide trip delays and travelers' transfer demands.
- The IDTO engine has been expanded to cover a larger regional area, taking into account the transit network, route connectivity, and optional transfer activities. To achieve this, the algorithm for protecting single-site connections has been generalized into a network optimization problem. This updated algorithm incorporates a more realistic transfer choice model, which reflects actual traveler behavior in various scenarios.
- The IDTO interfaces have been developed to be compatible with a MaaS trip planner and several different dispatch backends, allowing for effective message-delivery to buses and drivers. The transit agency's input and recommendations have been incorporated into the design of the workflow and interfaces.

The research team has collected baseline and experimental data in the designed tests to evaluate the benefits and impacts of R-TCP. The findings are listed below:

- The R-TCP strategy works for different conditions of BART and bus services. It can adapt to the BART schedules and the bus dispatch capabilities by implementing a dynamic operation algorithm taking into consideration overall on-time performance, downstream connections, and alternative trip choices.
- The ACT schedule has already established a system that aligns with the BART schedules, however, there are some routes that have a long headway more than 30 minutes, thus an adaptive dispatch mechanism is demanded to increase the connection success rate.
- Upon the transfer timeline patterns, the scheduled transfers have been categorized into two groups: the transfer interval that is greater than and less than 10 minutes (denoted as 10min+ and 10min-). While the 10min+ group has a transfer failure rate ranging from 0 to 0.35, in contrast, the 10min- group has a higher failure rate ranging from 0.08 to 0.57.
- Irrespective of the hour of day and transfer interval, the implementation of R-TCP can significantly reduce transfer failure trips by 45% to 60%.

5.2 Recommendations and Future Research

The IDTO projects have taken multi-year efforts to address the inter-modal and inter-agency connection problems towards seamless trips. Most agencies provide the transit trip service for a local or regional area, and many resources have been utilized to improve the in-vehicle trip performances. However, the connection/transfer segments consume an average of 25% of the entire trip time, and the related issues are more traveler specific than the in-vehicle segments.

The concept and applications of Integrated Dynamic Transit Operation can be extended to providing a **dynamic planning** service which makes intra-agency and inter-agency connectivity assessments and recommendations based on the schedule plans. It can also be extended to **demand estimations** of transfer from-to pairs from different sources including planning surveys, historic activity data and real-time trip planners. IDTO's capabilities can be upgraded to include **network optimization**. This would involve cross-jurisdictional operations, as well as the generation of connection protection policies/thresholds based on tradeoffs between traveler needs, passenger delays, and dispatching requirements.

A further recommendation is to streamline the implementation of dynamic transit operation based on the research findings. The proposed R-TCP strategy for enhancing multi-modal transfers is well-suited for the Bay Area, which is served by 27 distinct transit agencies. Seamless transfers are a crucial concern for both transit providers and commuters, particularly in light of the region's population growth and air quality concerns. If R-TCP can be tested and successfully executed in the Bay Area, it could encourage more locals to use public transportation for longer trips without worrying about reaching their destination on time. Additionally, in combination with the Clipper regional payment system, the R-TCP could foster greater cohesion among all transit agencies by establishing more complementary service schedules.

Appendix A BART Stations connected with AC Transit Bus Lines

- Union City (ID: UCTY)
- Fremont (ID: FRMT)
- Warm Springs / South Fremont (ID: WARM)
- Milpitas (ID: MLPT)
- Berryessa / North San Jose (ID: BERY)
- Richmond (ID: RICH)
- El Cerrito Del Norte (ID: DELN)
- El Cerrito Plaza (ID: PLZA)
- North Berkeley (ID: NBRK)
- Downtown Berkeley (ID: DBRK)
- Ashby (ID: ASHB)
- MacArthur (ID: MCAR)
- 19th Street Oakland (ID: 19TH)
- 12th Street / Oakland City Center (ID: 12TH)
- Lake Merritt (ID: LAKE)
- Fruitvale (ID: FTVL)
- Coliseum (ID: COLS)
- San Leandro (ID: SANL)
- Bay Fair (ID: BAYF)
- Hayward (ID: HAYW)
- South Hayward (ID: SHAY)

Appendix B Transferable Trips

The Transferable Trips have been defined as the connected route schedules having a reasonable linkage time that is from the arrival of a BART trip to the departure of an outbound bus trip, specified by the key attributes of {'from stop id', 'to stop id', 'to route name', 'from trip STA', 'to trip STD'}. The Transferrable Trips covering the entire ACT service network in the format of transfer from-to trip pairs for are listed in the following table.

Transfer Stop	**To route (with Direction)**	**Transfer *from STA- to STD***	**Note**
HAYW	56	05:32-05:45; 05:38-05:45; 06:32-06:45; 06:38-06:45; 07:32-07:45; 07:38-07:45; 08:32-08:45; 08:38-08:45; 09:32-09:45; 09:38-09:45; 10:32-10:45; 10:38-10:45; 11:32-11:45; 11:38-11:45; 12:32-12:45; 12:38-12:45; 13:32-13:45; 13:38-13:45; 14:32-14:45; 14:38-14:45; 15:32-15:45; 15:38-15:45; 16:32-16:45; 16:38-16:45; 17:32-17:45; 17:38-17:45; 18:32-18:45; 18:38-18:45; 19:32-19:45; 19:38-19:45;	
HAYW	34_D1	06:02-06:20; 06:08-06:20; 07:02-07:20; 07:08-07:20; 08:02-08:20; 08:08-08:20; 09:02-09:20; 09:08-09:20; 11:02-11:20; 11:08-11:20; 12:02-12:20; 12:08-12:20; 13:02-13:20; 13:08-13:20; 14:02-14:20; 14:08-14:20; 15:02-15:20; 15:08-15:20; 16:02-16:20; 16:08-16:20; 17:02-17:20; 17:08-17:20; 18:02-18:20; 18:08-18:20; 19:02-19:20; 19:08-19:20; 20:01-20:20; 20:08-20:20; 21:06-21:20; 22:06-22:20;	
12TH	19_D1	06:30-06:48; 06:39-06:48; 07:30-07:48; 07:39-07:48; 08:30-08:48; 08:39-08:48; 09:30-09:48; 09:39-09:48; 10:30-10:45; 10:39-10:45; 11:30-11:45; 11:39-11:45; 12:30-12:45; 12:39-12:45; 13:30-13:45; 13:39-13:45; 14:30-14:45; 14:39-14:45; 15:30-15:45; 15:39-15:45; 16:30-16:45; 16:39-16:45; 17:30-17:45; 17:39-17:45; 18:30-18:45; 18:39-18:45; 19:30-19:45; 19:39-19:45; 20:31-20:45;	
12TH	20_D1	05:24-05:37; 05:30-05:37; 05:54-06:07; 06:00-06:07; 06:15-06:32; 06:24-06:32; 06:45-07:02; 06:54-07:02; 07:15-07:29; 07:24-07:29; 07:39-07:52; 07:45-07:52; 08:09-08:26; 08:15-08:26; 08:39-08:56; 08:45-08:56; 09:09-09:26; 09:15-09:26; 09:39-09:53; 09:45-09:53; 10:09-10:23; 10:15-10:23; 10:39-10:53; 10:45-10:53; 11:09-11:21; 11:15-11:21; 11:39-11:50; 11:45-11:50; 12:09-12:20; 12:15-12:20; 12:30-12:45; 12:39-12:45; 13:00-13:15; 13:09-13:15; 13:30-13:45; 13:39-13:45; 13:54-14:13; 14:00-14:13; 14:24-14:43; 14:30-14:43; 14:54-15:13; 15:00-15:13; 15:24-15:43; 15:30-15:43; 15:54-16:13; 16:00-16:13; 16:24-16:43; 16:30-16:43; 16:54-17:12; 17:00-17:12; 17:30-17:44; 17:39-17:44; 17:54-18:13; 18:00-18:13; 18:30-18:46; 18:39-18:46; 19:00-19:16; 19:09-19:16; 19:30-19:46; 19:39-19:46; 20:00-20:16; 20:09-20:16; 20:31-20:49; 20:41-20:49; 20:44-20:49; 21:11-21:19; 21:14-21:19; 21:41-21:49; 21:44-21:49; 22:11-22:19;	
12TH	88_D1	22:45-23:04;	
12TH	14_D0	07:09-07:23; 07:15-07:23; 22:41-22:57; 22:45-22:57;	
12TH	14_D1	22:11-22:30; 22:15-22:30;	
12TH	12_D0	07:15-07:29; 07:54-08:11; 08:00-08:11; 09:24-09:37; 09:30-09:37; 12:09-12:21; 12:15-12:21; 14:24-14:42; 14:30-14:42; 15:24-15:43; 15:30-15:43; 19:15-19:33; 19:24-19:33; 19:45-20:03; 19:54-20:03; 20:14-20:33; 20:24-20:33; 20:44-21:03; 20:56-21:03; 21:14-21:33; 21:44-22:03; 22:15-22:33; 22:41-22:57; 22:45-22:57; 23:11-23:27; 23:15-23:27; 23:41-23:57; 23:45-23:57; 24:11-24:27; 24:15-24:27; 24:41-24:57;	

12TH	72M_D1	05:24-05:39; 05:30-05:39; 05:54-06:09; 06:00-06:09; 06:24-06:38; 06:30-06:38; 06:54-07:05; 07:24-07:38; 07:30-07:38; 07:54-08:09; 08:00-08:09; 08:24-08:38; 08:30-08:38; 08:54-09:05; 09:15-09:34; 09:24-09:34; 10:24-10:39; 10:30-10:39; 10:54-11:09; 11:00-11:09; 11:24-11:40; 11:30-11:40; 11:54-12:09; 12:00-12:09; 12:24-12:40; 12:30-12:40; 13:45-14:02; 13:54-14:02; 14:24-14:37; 14:30-14:37; 14:45-15:03; 14:54-15:03; 15:15-15:33; 15:24-15:33; 15:54-16:05; 16:24-16:35; 17:24-17:40; 17:30-17:40; 17:54-18:10; 18:00-18:10; 18:24-18:41; 18:30-18:41; 18:54-19:09; 19:00-19:09; 19:24-19:39; 19:30-19:39; 20:00-20:14; 20:41-20:54; 20:44-20:54; 22:41-22:54; 22:45-22:54;	
12TH	96_D0	06:09-06:24; 06:15-06:24; 06:39-06:54; 06:45-06:54; 07:09-07:24; 07:15-07:24; 07:39-07:55; 07:45-07:55; 08:09-08:25; 08:15-08:25; 08:39-08:55; 08:45-08:55; 09:09-09:26; 09:15-09:26; 09:39-09:56; 09:45-09:56; 10:09-10:26; 10:15-10:26; 10:39-10:56; 10:45-10:56; 11:09-11:26; 11:15-11:26; 11:39-11:56; 11:45-11:56; 12:09-12:26; 12:15-12:26; 12:39-12:56; 12:45-12:56; 13:09-13:26; 13:15-13:26; 13:39-13:57; 13:45-13:57; 14:09-14:27; 14:15-14:27; 14:39-14:55; 14:45-14:55; 15:09-15:25; 15:15-15:25; 15:39-15:55; 15:45-15:55; 16:09-16:25; 16:15-16:25; 16:39-16:55; 16:45-16:55; 17:09-17:25; 17:15-17:25; 17:39-17:55; 17:45-17:55; 18:09-18:23; 18:15-18:23; 18:39-18:53; 18:45-18:53; 19:09-19:23; 19:15-19:23; 19:39-19:53; 19:45-19:53; 20:09-20:23; 20:14-20:23; 20:41-20:53; 20:44-20:53; 21:11-21:23; 21:14-21:23; 21:41-21:52; 21:44-21:52; 22:11-22:22; 22:15-22:22;	
12TH	18_D1	22:15-22:33; 22:45-23:03; 23:15-23:33;	
12TH	33_D0	18:09-18:24; 18:15-18:24; 23:11-23:20; 23:15-23:20;	
12TH	1T_D0	05:30-05:44;	
RICH	70_D1	06:18-06:35; 07:18-07:35; 08:18-08:35; 09:18-09:35; 10:18-10:35; 11:18-11:35; 12:18-12:35; 13:18-13:35; 14:18-14:35; 15:18-15:35; 16:18-16:35; 17:18-17:35; 18:18-18:35; 19:18-19:35; 20:18-20:35;	
RICH	71_D1	06:33-06:40; 07:03-07:10; 07:33-07:40; 08:03-08:10; 08:33-08:40; 09:03-09:10; 09:33-09:40; 10:03-10:10; 10:33-10:40; 11:03-11:10; 11:33-11:40; 12:03-12:10; 12:33-12:41; 13:03-13:11; 13:33-13:41; 14:03-14:11; 14:33-14:41; 15:03-15:11; 15:33-15:41; 16:03-16:11; 16:33-16:41; 17:03-17:11; 17:33-17:41; 18:03-18:11; 18:33-18:41; 19:03-19:10; 19:33-19:40; 20:03-20:10; 20:32-20:40;	
RICH	71_D0	06:33-06:43; 07:03-07:13; 07:33-07:44; 08:03-08:16; 08:33-08:46; 09:03-09:16; 09:33-09:45; 10:03-10:15; 10:33-10:45; 11:03-11:15; 11:33-11:45; 12:03-12:15; 12:33-12:45; 13:03-13:15; 13:33-13:45; 14:03-14:15; 14:33-14:45; 15:03-15:15; 15:33-15:45; 16:03-16:15; 16:33-16:45; 17:03-17:15; 17:33-17:45; 18:03-18:15; 18:33-18:45; 19:03-19:15; 19:33-19:43; 20:03-20:13; 20:32-20:43; 21:06-21:13;	
RICH	74_D1	05:48-06:05; 06:18-06:35; 06:48-07:07; 07:18-07:35; 07:48-08:05; 08:18-08:35; 08:48-09:05; 09:18-09:35; 09:48-10:05; 10:18-10:35; 10:48-11:02; 11:18-11:31; 11:48-12:01; 12:18-12:31; 12:48-13:01; 13:18-13:31; 13:48-14:01; 14:18-14:31; 14:48-15:01; 15:18-15:31; 15:48-16:07; 16:18-16:31; 16:48-16:55; 17:18-17:31; 17:48-18:04; 18:18-18:34; 18:48-19:04; 19:18-19:34; 19:48-20:07; 20:18-20:37; 20:32-20:37; 20:49-21:07;	
RICH	76_D0	05:48-06:02; 06:18-06:32; 06:48-07:02; 07:18-07:32; 08:18-08:32; 08:48-09:04; 09:18-09:34; 09:48-10:04; 10:18-10:34; 10:48-11:04; 11:18-11:34; 11:48-12:05; 12:18-12:35; 12:48-13:05; 13:18-13:35; 13:48-14:05; 14:18-14:35; 14:48-15:05; 15:18-15:35; 15:48-16:05; 16:18-16:35; 16:48-17:05; 17:18-17:35; 17:48-18:05; 18:18-18:35; 18:48-19:05; 19:18-19:33; 19:48-20:03; 20:18-20:33;	
RICH	76_D1	06:03-06:10; 06:33-06:40; 07:03-07:10; 08:03-08:10; 08:33-08:41; 09:03-09:11; 09:33-09:41; 10:03-10:11; 10:33-10:41; 11:03-11:11; 11:33-11:43; 12:03-12:13;	

		12:33-12:43; 13:03-13:13; 13:33-13:43; 14:03-14:13; 14:33-14:43; 15:03-15:13; 15:33-15:43; 16:03-16:13; 16:33-16:43; 17:03-17:11; 17:33-17:41; 18:03-18:11; 18:33-18:41; 19:03-19:10; 20:32-20:38; 20:49-21:08;	
RICH	72M_D0	05:48-05:54; 06:18-06:26; 06:48-06:56; 07:18-07:32; 07:48-08:02; 08:33-08:39; 09:03-09:10; 09:33-09:39; 09:48-10:07; 10:18-10:36; 11:33-11:41; 12:03-12:11; 12:33-12:42; 13:03-13:11; 13:33-13:45; 14:48-15:07; 15:33-15:42; 17:03-17:10; 17:33-17:40; 18:33-18:45; 19:03-19:15; 19:33-19:43; 20:03-20:11; 20:32-20:41; 21:36-21:50; 23:36-23:46;	
RICH	72M_D1	05:48-05:56; 06:18-06:25; 06:48-07:02; 07:18-07:32; 07:48-08:02; 08:18-08:28; 08:48-09:02; 09:18-09:30; 09:48-10:00; 10:18-10:30; 10:48-11:00; 11:18-11:30; 12:18-12:28; 12:48-12:58; 13:18-13:29; 13:48-14:00; 14:18-14:30; 14:48-15:00; 15:48-15:59; 16:18-16:31; 16:48-17:01; 17:18-17:32; 17:48-18:03; 18:18-18:29; 19:18-19:29; 20:03-20:09; 20:32-20:49; 21:20-21:28; 22:36-22:47;	
DELN	76_D0	05:07-05:15; 05:37-05:45; 05:58-06:15; 06:07-06:15; 06:28-06:45; 06:37-06:45; 06:58-07:15; 07:07-07:15; 07:58-08:15; 08:07-08:15; 08:28-08:45; 08:37-08:45; 08:58-09:15; 09:07-09:15; 09:28-09:45; 09:37-09:45; 09:58-10:15; 10:07-10:15; 10:28-10:45; 10:37-10:45; 10:58-11:15; 11:07-11:15; 11:28-11:45; 11:37-11:45; 11:58-12:15; 12:07-12:15; 12:28-12:45; 12:37-12:45; 12:58-13:15; 13:07-13:15; 13:28-13:45; 13:37-13:45; 13:58-14:15; 14:07-14:15; 14:28-14:45; 14:37-14:45; 14:58-15:15; 15:07-15:15; 15:28-15:45; 15:37-15:45; 15:58-16:15; 16:07-16:15; 16:28-16:45; 16:37-16:45; 16:58-17:15; 17:07-17:15; 17:28-17:45; 17:37-17:45; 17:58-18:15; 18:07-18:15; 18:28-18:45; 18:37-18:45; 18:58-19:15; 19:07-19:15; 19:28-19:45; 19:37-19:45; 19:58-20:15; 20:09-20:15;	
DELN	7_D0	07:07-07:25; 07:13-07:25; 07:37-07:55; 07:43-07:55; 08:07-08:25; 08:13-08:25; 08:37-08:55; 08:43-08:55; 09:07-09:25; 09:13-09:25; 09:37-09:55; 09:43-09:55; 10:07-10:25; 10:13-10:25; 10:37-10:55; 10:43-10:55; 11:07-11:25; 11:13-11:25; 11:37-11:55; 11:43-11:55; 12:07-12:25; 12:13-12:25; 12:37-12:55; 12:43-12:55; 13:07-13:25; 13:13-13:25; 13:37-13:55; 13:43-13:55; 14:07-14:25; 14:13-14:25; 14:37-14:55; 14:43-14:55; 15:07-15:25; 15:13-15:25; 15:37-15:55; 15:43-15:55; 16:07-16:25; 16:13-16:25; 16:37-16:55; 16:43-16:55; 17:07-17:25; 17:13-17:25; 17:37-17:55; 17:43-17:55; 18:07-18:25; 18:13-18:25;	
DELN	18_D1	22:18-22:30; 22:48-23:00; 23:18-23:30;	
DELN	62_D0	06:21-06:38; 07:21-07:38; 15:03-15:17; 15:06-15:17; 24:18-24:37;	
DELN	62_D1	07:18-07:26; 17:18-17:33; 17:21-17:33; 17:36-17:54; 17:48-17:54;	
LAKE	96_D0	06:03-06:17; 06:06-06:17; 06:33-06:47; 06:36-06:47; 07:03-07:17; 07:06-07:17; 07:33-07:48; 07:36-07:48; 08:03-08:18; 08:06-08:18; 08:33-08:48; 08:36-08:48; 09:03-09:19; 09:06-09:19; 09:33-09:49; 09:36-09:49; 10:03-10:19; 10:06-10:19; 10:33-10:49; 10:36-10:49; 11:03-11:19; 11:06-11:19; 11:33-11:49; 11:36-11:49; 12:03-12:19; 12:06-12:19; 12:33-12:49; 12:36-12:49; 13:03-13:19; 13:06-13:19; 13:33-13:49; 13:36-13:49; 14:03-14:19; 14:06-14:19; 14:33-14:49; 14:36-14:49; 15:03-15:19; 15:06-15:19; 15:33-15:49; 15:36-15:49; 16:03-16:19; 16:06-16:19; 16:33-16:49; 16:36-16:49; 17:03-17:19; 17:06-17:19; 17:33-17:49; 17:36-17:49; 18:03-18:17; 18:06-18:17; 18:33-18:47; 18:36-18:47; 19:03-19:17; 19:06-19:17; 19:33-19:47; 19:36-19:47; 20:03-20:17; 20:06-20:17; 20:34-20:47; 20:38-20:47; 21:08-21:17; 21:38-21:46; 22:08-22:16;	
LAKE	96_D1	06:18-06:26; 06:21-06:26; 06:48-06:56; 06:51-06:56; 07:18-07:26; 07:21-07:26; 07:48-07:56; 07:51-07:56; 08:18-08:26; 08:21-08:26; 08:48-08:59; 08:51-08:59; 09:18-09:29; 09:21-09:29; 09:48-09:59; 09:51-09:59; 10:18-10:29; 10:21-10:29; 10:48-10:59; 10:51-10:59; 11:18-11:29; 11:21-11:29; 11:48-11:59; 11:51-11:59; 12:18-12:29; 12:21-12:29; 12:48-13:00; 12:51-13:00; 13:18-13:30; 13:21-13:30; 13:48-14:00; 13:51-14:00; 14:18-14:30; 14:21-14:30; 14:48-15:00; 14:51-15:00;	

		15:18-15:30; 15:21-15:30; 15:48-16:00; 15:51-16:00; 16:18-16:30; 16:21-16:30; 16:48-16:59; 16:51-16:59; 17:18-17:29; 17:21-17:29; 17:48-17:56; 17:51-17:56; 18:18-18:26; 18:21-18:26; 18:36-18:55; 18:48-18:55; 19:06-19:25; 19:18-19:25; 19:36-19:55; 19:48-19:55; 20:06-20:25; 20:17-20:25; 20:38-20:55; 20:47-20:55; 21:08-21:25; 21:17-21:25; 21:38-21:55; 21:47-21:55; 22:08-22:25; 22:18-22:25;	
DBRK	88_D0	08:01-08:13; 08:05-08:13; 08:31-08:43; 08:35-08:43; 09:01-09:13; 09:05-09:13; 09:31-09:43; 09:35-09:43; 10:01-10:13; 10:05-10:13; 10:31-10:43; 10:35-10:43; 11:01-11:13; 11:05-11:13; 11:31-11:43; 11:35-11:43; 12:01-12:12; 12:05-12:12; 12:31-12:42; 12:35-12:42; 13:01-13:12; 13:05-13:12; 13:31-13:42; 13:35-13:42; 14:01-14:12; 14:05-14:12; 14:31-14:42; 14:35-14:42; 15:01-15:12; 15:05-15:12; 15:31-15:42; 15:35-15:42; 16:01-16:12; 16:05-16:12; 16:31-16:42; 16:35-16:42; 17:01-17:12; 17:05-17:12; 17:31-17:43; 17:35-17:43; 18:01-18:13; 18:05-18:13; 18:31-18:43; 18:35-18:43; 19:01-19:13; 19:05-19:13;	
DBRK	7_D1	08:01-08:13; 08:05-08:13; 08:31-08:43; 08:35-08:43; 09:01-09:13; 09:05-09:13; 09:31-09:43; 09:35-09:43; 10:01-10:13; 10:05-10:13; 10:31-10:43; 10:35-10:43; 11:01-11:13; 11:05-11:13; 11:31-11:43; 11:35-11:43; 12:01-12:12; 12:05-12:12; 12:31-12:42; 12:35-12:42; 13:01-13:12; 13:05-13:12; 13:31-13:42; 13:35-13:42; 14:01-14:12; 14:05-14:12; 14:31-14:42; 14:35-14:42; 15:01-15:12; 15:05-15:12; 15:31-15:42; 15:35-15:42; 16:01-16:12; 16:05-16:12; 16:31-16:42; 16:35-16:42; 17:01-17:12; 17:05-17:12; 17:31-17:43; 17:35-17:43; 18:01-18:13; 18:05-18:13; 18:31-18:43; 18:35-18:43; 19:01-19:13; 19:05-19:13;	
ASHB	12_D0	07:18-07:37; 07:18-07:37; 08:48-09:00; 08:48-09:00; 14:48-15:01; 14:48-15:01; 18:48-18:57; 18:48-18:57; 19:18-19:27; 19:18-19:27; 19:48-19:57; 19:48-19:57; 20:18-20:27; 20:21-20:27; 20:51-20:57; 21:21-21:27; 21:51-21:57; 22:21-22:27; 22:51-22:57; 23:21-23:27; 23:51-23:57; 24:21-24:27;	
ASHB	12_D1	08:18-08:31; 08:18-08:31; 09:18-09:33; 09:18-09:33; 09:48-09:57; 09:48-09:57; 19:18-19:37; 19:18-19:37; 19:48-20:07; 19:48-20:07; 20:18-20:35; 20:21-20:35; 20:51-21:05; 21:21-21:35; 21:51-22:05; 22:21-22:32; 22:51-23:00; 23:21-23:30; 23:51-24:00; 24:21-24:30; 24:45-25:00;	
DBRK	79_D0	05:46-06:01; 05:50-06:01; 06:16-06:31; 06:20-06:31; 06:46-07:02; 06:50-07:02; 07:16-07:35; 07:20-07:35; 07:46-08:05; 07:50-08:05; 08:16-08:35; 08:20-08:35; 08:46-09:05; 08:50-09:05; 09:16-09:35; 09:20-09:35; 09:46-10:05; 09:50-10:05; 10:20-10:36; 10:31-10:36; 10:50-11:06; 11:01-11:06; 11:20-11:36; 11:31-11:36; 11:50-12:07; 12:01-12:07; 12:20-12:38; 12:31-12:38; 12:50-13:08; 13:01-13:08; 13:20-13:38; 13:31-13:38; 13:50-14:08; 14:01-14:08; 14:20-14:38; 14:31-14:38; 14:50-15:08; 15:01-15:08; 15:20-15:38; 15:31-15:38; 15:50-16:08; 16:01-16:08; 16:20-16:38; 16:31-16:38; 16:50-17:08; 17:01-17:08; 17:20-17:38; 17:31-17:38; 17:50-18:08; 18:01-18:08; 18:20-18:36; 18:31-18:36; 18:50-19:06; 19:01-19:06; 19:20-19:36; 19:31-19:36; 19:50-20:06; 20:01-20:06; 20:18-20:36; 20:20-20:36; 20:31-20:36; 20:53-21:06; 21:01-21:06; 21:23-21:36; 21:31-21:36; 21:53-22:06; 22:23-22:36;	
DBRK	79_D1	05:46-05:56; 05:50-05:56; 06:16-06:26; 06:20-06:26; 06:46-06:56; 06:50-06:56; 07:16-07:26; 07:20-07:26; 07:46-07:58; 07:50-07:58; 08:16-08:28; 08:20-08:28; 08:46-08:59; 08:50-08:59; 09:16-09:29; 09:20-09:29; 09:46-09:59; 09:50-09:59; 10:16-10:29; 10:20-10:29; 10:46-11:01; 10:50-11:01; 11:16-11:31; 11:20-11:31; 11:46-12:01; 11:50-12:01; 12:16-12:31; 12:20-12:31; 12:46-13:02; 12:50-13:02; 13:16-13:32; 13:20-13:32; 13:46-14:02; 13:50-14:02; 14:16-14:33; 14:20-14:33; 14:46-15:03; 14:50-15:03; 15:16-15:33; 15:20-15:33; 15:46-16:03; 15:50-16:03; 16:16-16:33; 16:20-16:33; 16:46-17:03; 16:50-17:03; 17:16-17:33; 17:20-17:33; 17:46-18:02; 17:50-18:02; 18:16-18:29; 18:20-18:29; 18:46-18:59; 18:50-18:59; 19:16-19:29; 19:20-19:29; 19:46-19:58; 19:50-19:58; 20:18-20:28; 20:20-20:28; 20:53-20:58; 21:23-21:28; 21:53-21:58; 22:23-22:28;	

PLZA	79_D0	"05:40-05:48; 05:40-05:48; 06:10-06:18; 06:10-06:18; 06:40-06:48; 06:40-06:48; 07:10-07:18; 07:10-07:18; 07:40-07:48; 07:40-07:48; 08:10-08:18; 08:10-08:18; 08:40-08:48; 08:40-08:48; 09:10-09:18; 09:10-09:18; 09:40-09:48; 09:40-09:48; 10:10-10:18; 10:10-10:18; 10:40-10:48; 10:40-10:48; 11:10-11:18; 11:10-11:18; 11:40-11:48; 11:40-11:48; 12:10-12:18; 12:10-12:18; 12:40-12:48; 12:40-12:48; 13:10-13:18; 13:10-13:18; 13:40-13:48; 13:40-13:48; 14:10-14:18; 14:10-14:18; 14:40-14:48; 14:40-14:48; 15:10-15:18; 15:10-15:18; 15:40-15:48; 15:40-15:48; 16:10-16:18; 16:10-16:18; 16:40-16:48; 16:40-16:48; 17:10-17:18; 17:10-17:18; 17:40-17:48; 17:40-17:48; 18:10-18:18; 18:10-18:18; 18:40-18:48; 18:40-18:48; 19:10-19:18; 19:10-19:18; 19:40-19:48; 19:40-19:48; 20:10-20:18; 20:12-20:18; 20:41-20:48; "	
PLZA	72M_D0	"05:10-05:17; 05:40-05:47; 05:40-05:47; 06:10-06:17; 06:10-06:17; 06:40-06:46; 06:40-06:46; 07:10-07:25; 07:10-07:25; 07:40-07:55; 07:40-07:55; 08:10-08:25; 08:10-08:25; 08:40-08:51; 08:40-08:51; 09:10-09:25; 09:10-09:25; 09:40-09:55; 09:40-09:55; 10:10-10:25; 10:10-10:25; 10:40-10:55; 10:40-10:55; 11:10-11:25; 11:10-11:25; 11:40-11:59; 11:40-11:59; 12:40-12:57; 12:40-12:57; 13:10-13:27; 13:10-13:27; 13:40-13:58; 13:40-13:58; 14:10-14:29; 14:10-14:29; 14:40-14:59; 14:40-14:59; 15:10-15:29; 15:10-15:29; 16:10-16:28; 16:10-16:28; 16:40-16:58; 16:40-16:58; 17:10-17:28; 17:10-17:28; 17:40-17:59; 17:40-17:59; 18:10-18:29; 18:10-18:29; 18:40-18:55; 18:40-18:55; 19:40-19:55; 19:40-19:55; 20:25-20:33; 20:25-20:33; 20:55-21:11; 20:58-21:11; 22:56-23:09; 22:58-23:09; "	
PLZA	72M_D1	"05:55-06:09; 05:55-06:09; 06:25-06:39; 06:25-06:39; 07:25-07:42; 07:25-07:42; 08:40-08:46; 08:40-08:46; 09:25-09:43; 09:25-09:43; 09:55-10:12; 09:55-10:12; 11:10-11:17; 11:10-11:17; 11:40-11:47; 11:40-11:47; 12:10-12:18; 12:10-12:18; 12:40-12:47; 12:40-12:47; 13:10-13:21; 13:10-13:21; 14:25-14:43; 14:25-14:43; 15:10-15:18; 15:10-15:18; 15:25-15:44; 15:25-15:44; 15:55-16:14; 15:55-16:14; 16:40-16:46; 16:40-16:46; 17:10-17:16; 17:10-17:16; 18:10-18:21; 18:10-18:21; 18:40-18:51; 18:40-18:51; 19:10-19:19; 19:10-19:19; 19:40-19:47; 19:40-19:47; 20:10-20:17; 20:41-20:50; 21:13-21:30; 21:56-22:10; 21:58-22:10; 22:28-22:46; "	
FTVL	O_D0	05:17-05:30; 05:22-05:30; 05:47-06:00; 05:52-06:00; 06:17-06:30; 06:22-06:30; 07:17-07:30; 07:22-07:30; 07:47-08:00; 07:52-08:00; 08:17-08:30; 08:22-08:30; 08:47-09:00; 08:52-09:00; 09:17-09:30; 09:22-09:30; 09:47-10:00; 09:52-10:00; 10:17-10:30; 10:22-10:30; 10:47-11:00; 10:52-11:00; 11:17-11:30; 11:22-11:30; 11:47-12:00; 11:52-12:00; 12:17-12:30; 12:22-12:30; 12:47-13:00; 12:52-13:00; 13:17-13:30; 13:22-13:30; 13:47-14:00; 13:52-14:00; 14:17-14:30; 14:22-14:30; 14:47-15:00; 14:52-15:00; 15:17-15:30; 15:22-15:30; 15:47-16:00; 15:52-16:00; 16:17-16:30; 16:22-16:30; 16:47-17:00; 16:52-17:00; 17:17-17:30; 17:22-17:30; 17:47-18:00; 17:52-18:00; 18:17-18:30; 18:22-18:30; 18:47-19:00; 18:52-19:00; 19:17-19:30; 19:22-19:30; 19:47-20:00; 19:52-20:00; 20:17-20:30; 20:21-20:30; 20:48-21:00; 20:51-21:00;	
FTVL	20_D1	05:17-05:36; 05:22-05:36; 05:47-06:06; 05:52-06:06; 06:17-06:36; 06:22-06:36; 06:47-07:04; 06:52-07:04; 07:17-07:34; 07:22-07:34; 07:47-08:01; 07:52-08:01; 08:17-08:33; 08:22-08:33; 09:17-09:33; 09:22-09:33; 09:47-10:03; 09:52-10:03; 10:17-10:34; 10:22-10:34; 10:47-11:04; 10:52-11:04; 11:47-12:02; 11:52-12:02; 12:17-12:31; 12:22-12:31; 12:47-13:01; 12:52-13:01; 13:17-13:29; 13:22-13:29; 14:17-14:29; 14:22-14:29; 14:47-14:59; 14:52-14:59; 15:17-15:29; 15:22-15:29; 15:47-15:59; 15:52-15:59; 16:47-16:59; 16:52-16:59; 17:17-17:29; 17:22-17:29; 17:47-17:58; 17:52-17:58; 18:07-18:26; 18:17-18:26; 19:07-19:22; 19:37-19:52; 20:07-20:22; 21:04-21:19; 21:34-21:49; 22:04-22:19; 23:04-23:19; 24:04-24:19;	
FTVL	20_D0	05:17-05:35; 05:22-05:35; 05:47-06:05; 05:52-06:05; 06:22-06:37; 06:32-06:37; 06:52-07:07; 07:02-07:07; 07:22-07:39; 07:32-07:39; 07:52-08:09; 08:02-08:09; 08:22-08:39; 08:32-08:39; 08:52-09:09; 09:02-09:09; 09:52-10:09; 10:02-10:09; 10:22-10:39; 10:32-10:39; 10:52-11:09; 11:02-11:09; 11:22-11:39; 11:32-11:39; 12:22-12:41; 12:32-12:41; 12:52-13:11; 13:02-13:11; 13:22-13:41; 13:32-13:41; 13:52-14:11; 14:02-14:11; 15:02-15:13; 15:07-15:13; 15:32-15:43; 15:37-15:43;	

		16:02-16:13; 16:07-16:13; 16:22-16:41; 16:32-16:41; 17:22-17:41; 17:32-17:41; 17:52-18:11; 18:02-18:11; 18:22-18:40; 18:32-18:40; 18:52-19:08; 19:02-19:08; 19:47-20:00; 19:52-20:00; 20:17-20:28; 20:21-20:28; 20:48-20:58; 20:51-20:58;	
FTVL	21_D0	05:32-05:50; 05:37-05:50; 06:07-06:22; 06:17-06:22; 06:37-06:52; 06:47-06:52; 07:07-07:22; 07:17-07:22; 07:37-07:54; 07:47-07:54; 08:07-08:24; 08:17-08:24; 08:37-08:54; 08:47-08:54; 09:07-09:24; 09:17-09:24; 09:37-09:54; 09:47-09:54; 10:07-10:24; 10:17-10:24; 10:37-10:54; 10:47-10:54; 11:07-11:24; 11:17-11:24; 11:37-11:56; 11:47-11:56; 12:07-12:26; 12:17-12:26; 12:37-12:56; 12:47-12:56; 13:07-13:26; 13:17-13:26; 13:37-13:56; 13:47-13:56; 14:07-14:26; 14:17-14:26; 14:47-14:58; 14:52-14:58; 15:17-15:28; 15:22-15:28; 15:47-15:58; 15:52-15:58; 16:07-16:26; 16:17-16:26; 16:37-16:56; 16:47-16:56; 17:07-17:26; 17:17-17:26; 17:37-17:56; 17:47-17:56; 18:07-18:26; 18:17-18:26; 18:37-18:53; 18:47-18:53; 19:02-19:20; 19:07-19:20; 19:32-19:45; 19:37-19:45; 20:02-20:13; 20:07-20:13; 20:34-20:43; 20:38-20:43; 21:04-21:13; 21:21-21:39; 21:34-21:39; 21:51-22:09; 22:04-22:09;	
SANL	34_D0	06:09-06:19; 06:14-06:19; 07:09-07:21; 07:14-07:21; 08:09-08:20; 08:14-08:20; 10:09-10:20; 10:14-10:20; 11:09-11:23; 11:14-11:23; 12:09-12:22; 12:14-12:22; 13:09-13:22; 13:14-13:22; 15:09-15:22; 15:14-15:22; 16:09-16:22; 16:14-16:22; 17:09-17:21; 17:14-17:21; 18:09-18:21; 18:14-18:21; 19:09-19:21; 19:14-19:21; 20:09-20:20; 20:14-20:20;	
SANL	34_D1	06:39-06:55; 06:44-06:55; 07:39-07:55; 07:44-07:55; 08:39-08:58; 08:44-08:58; 09:39-09:58; 09:44-09:58; 11:44-12:00; 11:54-12:00; 12:44-13:00; 12:54-13:00; 13:44-14:02; 13:54-14:02; 14:44-15:02; 14:54-15:02; 15:54-16:07; 15:59-16:07; 16:44-17:03; 16:54-17:03; 17:44-18:03; 17:54-18:03; 18:44-19:00; 18:54-19:00; 19:44-20:00; 19:54-20:00; 20:41-21:00; 20:46-21:00;	
SANL	35_D0	07:29-07:48; 07:39-07:48; 08:29-08:48; 08:39-08:48; 09:29-09:48; 09:39-09:48; 10:29-10:48; 10:39-10:48; 12:39-12:49; 12:44-12:49; 13:39-13:49; 13:44-13:49; 14:39-14:49; 14:44-14:49; 15:39-15:49; 15:44-15:49; 16:39-16:49; 16:44-16:49; 17:39-17:49; 17:44-17:49; 18:29-18:47; 18:39-18:47; 19:29-19:47; 19:39-19:47; 20:29-20:47; 20:41-20:47; 21:29-21:47; 22:30-22:47;	
SANL	35_D1	06:09-06:26; 06:14-06:26; 07:09-07:27; 07:14-07:27; 09:09-09:28; 09:14-09:28; 10:09-10:28; 10:14-10:28; 11:09-11:28; 11:14-11:28; 12:14-12:30; 12:24-12:30; 14:09-14:22; 14:14-14:22; 15:09-15:22; 15:14-15:22; 16:09-16:27; 16:14-16:27; 17:14-17:32; 17:24-17:32; 18:14-18:32; 18:24-18:32; 19:14-19:32; 19:24-19:32; 20:14-20:31; 20:26-20:31;	
UCTY	232_D0	"08:23-08:37; 09:23-09:37; 10:23-10:37; 11:23-11:37; 12:23-12:37; 13:23-13:38; 13:32-13:38; 14:23-14:38; 14:32-14:38; 15:23-15:38; 15:32-15:38; 16:23-16:40; 16:32-16:40; 17:23-17:40; 17:32-17:40; 18:23-18:38; 18:32-18:38; 19:23-19:38; 19:32-19:38; 20:24-20:38; 20:31-20:38; "	
UCTY	232_D1	"07:02-07:20; 07:08-07:20; 08:02-08:21; 08:08-08:21; 09:02-09:21; 09:08-09:21; 10:02-10:21; 10:08-10:21; 11:02-11:21; 11:08-11:21; 12:02-12:21; 12:08-12:21; 13:02-13:21; 13:08-13:21; 14:02-14:21; 14:08-14:21; 15:02-15:21; 15:08-15:21; 16:02-16:21; 16:08-16:21; 17:02-17:21; 17:08-17:21; 18:02-18:21; 18:08-18:21; 19:02-19:20; 19:08-19:20; "	
WARM	215_D0	"06:27-06:41; 06:28-06:41; 07:27-07:41; 07:28-07:41; 08:27-08:41; 08:28-08:41; 09:27-09:41; 09:28-09:41; 10:27-10:43; 10:28-10:43; 11:27-11:43; 11:28-11:43; 12:27-12:43; 12:28-12:43; 13:27-13:43; 13:28-13:43; 14:27-14:43; 14:28-14:43; 15:27-15:43; 15:28-15:43; 16:27-16:43; 16:28-16:43; 17:42-17:48; 18:42-18:48; 19:42-19:48; 20:29-20:48; 20:42-20:48; "	
WARM	215_D1	"07:12-07:31; 07:13-07:31; 08:12-08:31; 08:13-08:31; 09:12-09:31; 09:13-09:31; 10:12-10:31; 10:13-10:31; 11:12-11:31; 11:13-11:31; 12:12-12:31; 12:13-12:31;	

		13:12-13:31; 13:13-13:31; 14:12-14:31; 14:13-14:31; 15:13-15:32; 16:13-16:32; 17:13-17:32; 18:13-18:32; 19:13-19:32; 20:13-20:30; 20:13-20:30; 21:14-21:30; "	
WARM	217_D0	"06:27-06:40; 06:28-06:40; 06:57-07:10; 06:58-07:10; 07:27-07:40; 07:28-07:40; 07:57-08:10; 07:58-08:10; 08:27-08:39; 08:28-08:39; 08:57-09:07; 08:58-09:07; 09:27-09:37; 09:28-09:37; 09:57-10:07; 09:58-10:07; 10:27-10:39; 10:28-10:39; 10:57-11:09; 10:58-11:09; 11:27-11:39; 11:28-11:39; 11:57-12:09; 11:58-12:09; 12:27-12:39; 12:28-12:39; 12:57-13:09; 12:58-13:09; 13:27-13:39; 13:28-13:39; 13:57-14:09; 13:58-14:09; 14:27-14:39; 14:28-14:39; 14:57-15:10; 14:58-15:10; 15:27-15:40; 15:28-15:40; 15:57-16:10; 15:58-16:10; 16:27-16:40; 16:28-16:40; 16:57-17:10; 16:58-17:10; 17:27-17:40; 17:28-17:40; 17:57-18:10; 17:58-18:10; 18:27-18:40; 18:28-18:40; 18:57-19:10; 18:58-19:10; 19:27-19:40; 19:28-19:40; 19:58-20:10; 19:59-20:10; 20:28-20:40; 20:29-20:40; 20:57-21:05; 20:59-21:05; 21:27-21:35; 21:29-21:35; 21:57-22:05; 21:59-22:05; "	
WARM	217_D1	"07:27-07:43; 07:28-07:43; 07:57-08:13; 07:58-08:13; 08:27-08:43; 08:28-08:43; 08:57-09:15; 08:58-09:15; 09:27-09:45; 09:28-09:45; 09:57-10:15; 09:58-10:15; 10:27-10:45; 10:28-10:45; 10:57-11:15; 10:58-11:15; 11:27-11:45; 11:28-11:45; 11:57-12:15; 11:58-12:15; 12:27-12:45; 12:28-12:45; 12:57-13:15; 12:58-13:15; 13:27-13:45; 13:28-13:45; 13:57-14:15; 13:58-14:15; 14:27-14:45; 14:28-14:45; 14:57-15:15; 14:58-15:15; 15:27-15:45; 15:28-15:45; 15:57-16:15; 15:58-16:15; 16:27-16:46; 16:28-16:46; 16:57-17:14; 16:58-17:14; 17:27-17:44; 17:28-17:44; 17:57-18:14; 17:58-18:14; 18:27-18:44; 18:28-18:44; 18:57-19:14; 18:58-19:14; 19:27-19:44; 19:28-19:44; 19:58-20:14; 19:59-20:14; 20:28-20:44; 20:29-20:44; 20:57-21:13; 20:59-21:13; 21:27-21:40; 21:29-21:40; 21:57-22:10; 21:59-22:10; "	
MLPT	217_D1	"07:04-07:20; 07:06-07:20; 07:34-07:50; 07:36-07:50; 08:04-08:20; 08:06-08:20; 08:34-08:50; 08:36-08:50; 09:04-09:20; 09:06-09:20; 09:34-09:50; 09:36-09:50; 10:04-10:20; 10:06-10:20; 10:34-10:50; 10:36-10:50; 11:04-11:20; 11:06-11:20; 11:34-11:50; 11:36-11:50; 12:04-12:20; 12:06-12:20; 12:34-12:50; 12:36-12:50; 13:04-13:20; 13:06-13:20; 13:34-13:50; 13:36-13:50; 14:04-14:20; 14:06-14:20; 14:34-14:50; 14:36-14:50; 15:04-15:20; 15:06-15:20; 15:34-15:50; 15:36-15:50; 16:04-16:20; 16:06-16:20; 16:34-16:50; 16:36-16:50; 17:04-17:20; 17:06-17:20; 17:34-17:50; 17:36-17:50; 18:04-18:20; 18:06-18:20; 18:34-18:50; 18:36-18:50; 19:04-19:20; 19:06-19:20; 19:33-19:50; 19:36-19:50; 20:05-20:20; 20:06-20:20; 20:36-20:50; 21:05-21:20; 21:35-21:50; "	
FRMT			

Appendix C Transfer Failure Reduction with R-TCP

The rows of the table represent various Connected Stops and Routes. The percentages of *transfer failure rate* are provided for each transfer route, both with and without implementing R-TCP, across two groups. These rates are calculated by dividing the number of failed transfers caused by transfer-from vehicle delays by the total number of transfer trips. If there are no trips under a particular group, the symbol "-" is used to indicate this.

BART Station	Bus line-Direction-Stop ID	Interval > 10min Group		Interval <= 10min Group	
		no R-TCP	with R-TCP	no R-TCP	with R-TCP
'12TH'	'12-0-2475'	10%	6%	37%	18%
'12TH'	'14-0-2068'	19%	12%	7%	0%
'12TH'	'14-1-2069'	0%	0%	-	-
'12TH'	'18-1-6295'	0%	0%	-	-
'12TH'	'19-1-2030'	0%	0%	36%	22%
'12TH'	'1T-0-6174'	0%	0%	-	-
'12TH'	'20-1-2030'	10%	5%	29%	16%
'12TH'	'33-0-6187'	14%	7%	26%	2%
'12TH'	'72-1-2477'	0%	0%	-	-
'12TH'	'72M-1-2477'	18%	10%	13%	6%
'12TH'	'72R-1-2477'	-	-	50%	14%
'12TH'	'88-1-2036'	0%	0%	-	-
'12TH'	'96-0-2475'	16%	10%	8%	2%
'ASHB'	'12-0-531'	13%	6%	38%	20%
'ASHB'	'12-1-532'	18%	8%	26%	14%
'BAYF'	'35-1-6094'	9%	2%	35%	7%
'DBRK'	'7-1-5251'	7%	2%	39%	26%
'DBRK'	'79-0-649'	15%	9%	24%	5%
'DBRK'	'79-1-6090'	11%	5%	44%	26%
'DBRK'	'88-0-5866'	0%	0%	-	-
'DELN'	'7-6230'	16%	9%	-	-
'DELN'	'72M-6231'	14%	7%	18%	11%
'DELN'	'72M-867'	13%	9%	13%	4%
'DELN'	'76-862'	19%	12%	9%	3%
'FRMT'	'215-0-1031'	14%	4%	28%	5%
'FRMT'	'217-0-5601'	5%	2%	30%	17%
'FRMT'	'232-1-5217'	19%	6%	29%	9%
'FTVL'	'20-0-2843'	6%	2%	33%	17%

'FTVL'	'20-1-2841'	12%	6%	22%	7%
'FTVL'	'21-0-2843'	4%	2%	34%	18%
'FTVL'	'21-1-2841'	13%	7%	24%	6%
'FTVL'	'62-0-2840'	-	-	21%	21%
'FTVL'	'O-0-2838'	21%	14%	20%	4%
'HAYW'	'34-1-1594'	11%	3%	-	-
'HAYW'	'56-0-1595'	15%	7%	32%	8%
'LAKE'	'18-1-2309'	5%	2%	-	-
'LAKE'	'62-0-2309'	11%	6%	-	-
'LAKE'	'62-1-3317'	19%	12%	14%	11%
'LAKE'	'88-1-3317'	7%	0%	-	-
'LAKE'	'96-0-3317'	12%	7%	32%	23%
'LAKE'	'96-1-3317'	8%	3%	29%	15%
'MLPT'	'217-1-6047'	13%	4%	-	-
'PLZA'	'72M-0-875'	12%	7%	26%	12%
'PLZA'	'72M-1-872'	13%	8%	31%	17%
'PLZA'	'79-0-874'	-	-	25%	14%
'RICH'	'70-1-5560'	21%	11%	-	-
'RICH'	'71-0-5566'	34%	21%	44%	23%
'RICH'	'71-1-5561'	-	-	40%	28%
'RICH'	'72M-0-5564'	32%	20%	45%	22%
'RICH'	'72M-1-5563'	28%	16%	45%	28%
'RICH'	'74-0-5565'	23%	14%	38%	25%
'RICH'	'74-1-5562'	24%	13%	57%	39%
'RICH'	'76-0-5562'	25%	13%	-	-
'RICH'	'76-1-5565'	36%	7%	39%	27%
'SANL'	'34-0-4367'	20%	10%	22%	5%
'SANL'	'34-1-4367'	3%	0%	32%	15%
'SANL'	'35-0-4367'	10%	5%	32%	13%
'SANL'	'35-1-4367'	9%	2%	28%	15%
'UCTY'	'232-0-4667'	13%	3%	35%	12%
'UCTY'	'232-1-4667'	9%	4%	-	-
'WARM'	'215-0-5889'	12%	2%	39%	13%
'WARM'	'215-1-5607'	3%	1%	-	-
'WARM'	'217-0-5889'	18%	5%	23%	9%
'WARM'	'217-1-5607'	7%	2%	-	-
Average		**12.8%**	**6.2%**	**30.0%**	**14.0%**